Pulsar 125 ST / T / 100 T

BAJAJ
Distinctly Ahead

Pulsar 125 ST / T / 100 T

Bajaj Auto Limited
Akurdi Pune 411 035 India

Tel +91 20 27472851
Fax +91 20 27407385
www.bajajauto.com

Spare Parts Catalogue

Notice

All information contained in this manual is based on the latest product information at the time of publication. Bajaj Auto Limited accepts no liability for any inaccuracies or omissions in this publication, although every possible care has been taken to make it as complete and accurate as possible. All procedures and specifications subject to change without prior notice. The right is reserved to make such changes at any time without prior notice and without incurring an obligation to make such changes to product manufactured previously. Contact your authorized Bajaj Dealer for the latest information on product improvements incorporated after this manual was issued.

DOC. NO.: 71111758 **REV. 00, JUN 13**

Copy rights : All rights reserved. No part of this publicatin may be reproduced, stored in a retrival system, Or transmitted in any form or by any means, electromic mechanical photocopying, recording or otherwise, without the prior written permission of Bajaj Auto LTD.

Revision No. & Change Details

REV. NO., MM YY	PART NUMBER	SHORT DESCRIPTION	QTY.	SR. NO.	PAGE NO.	A: Add D: Delete C: Change	Reason for change

Revision No. & Change Details

REV. NO., MM YY	PART NUMBER	SHORT DESCRIPTION	QTY.	SR. NO.	PAGE NO.	A: Add D: Delete C: Change	Reason for change

Foreword

We have pleasure in presenting the Spare Parts Catalogue for **'Discover 125 ST / T / 100T'** Motorcycle. This catalogue has been specially designed to assist you in selecting the correct parts for procurement to maintain 100% availability.

The Bajaj spares are subjected to the stringent quality control standards to ensure longer life of the vehicle. It is therefore necessary that only the Genuine Bajaj Spares are used.

In a continual effort to improve Performance and Efficiency of the vehicles, Specifications, Diagrams, Illustrations and Part Numbers can change without notice. Consequently, the description in this Spare Parts Catalogue cannot therefore be final and binding on us.

The modifications / alterations which are carried out after the issue of this catalogue, will be conveyed to you through our Service Circulars. You are requested to make necessary corrections in the Parts Catalogue as per the circulars so as to keep your catalogue up-to-date. This will ensure the appropriate and speedy delivery of the Spare Parts as the order placed will bear the latest part numbers.

In case, if you need any technical assistance contact the concerned Regional Office or write to us on the following address :

Bajaj Auto Limited
Service Department
Akurdi, Pune 411 035 India
Phone : 020-27406557
Fax : 020-27407385

Instructions

1. **How to Read the Catalogue :** Open the catalogue and from the pictorial index locate the group in which the part you want to find is present. Turn over to the concerned page number (as given by pictorial index). Now find out the figure of the part you wish to order. Write down the part number against that particular figure number from the text.

   In case, if you have the part number and you need the other details, the part index can be used. The part index (at the end of the catalogue) will give you the figure and page number of the part you wish to order.

2. **How to Order Spare Parts :** The part number and the description of the part required should be invariably mentioned in the order as per the catalogue text.

   The latest part number as conveyed through our service circulars should only appear on the order. In case of ordering painted components, colour shade of the components should be mentioned.

   The quantity shown against the part number is the quantity per vehicle for that group so that particular quantity should be multiplied by the number of sets required.

3. **Part Number System :** We have used 8 digit system for part numbers. The model or hardware item is indicated by first two digits or alphanumeric, the next two or four digits indicate main group and the last four or two digits indicate serial number in main group or serial number or subgroup of fastener respectively. Thus the part numbers will be indicated by 2-2-4 or 2-4-2 digit system. Understanding this system will enable you to identify the spare parts easily.

4. **Abbreviations :** The following abbreviations are used in this catalogue.

Assly	Assembly	V	Volts
N.I.	Not illustrated	W	Watts
C'case	Crankcase	Accl.	Accelerator
Cyl	Cylinder	Comp.	Complete
O/s	Over size	Fr.	Front
Rr.	Rear	Std.	Standard
L	Length	A/t.	Alternate
R.H.	Right hand	L.H.	Left hand
Hex.	Hexagonal	AR	As required

Plate No.	Description	Page No.
1	Cover Cylinder Head	2
2	Cylinder Head	4
3	Valve	6
4	Camshaft / Tensioner	8
5	Cylinder and Piston	10
6	Crankshaft	12
7	Transmission	14
8	Change Drum / Shift Fork	16
9	Gear Change Mechanism	18
10	Engine Assly / Crankcase RH	20
11	Crankcase LH	22
12	Oil Pump	24
13	Kick Starter Mechanism	26
14	Cover Clutch	28
15	Cover Magneto	30
16	Clutch Assly	32
17	Carburettor (125 ST & T)	34
18	Carburettor (100 T)	36
19	Air Cleaner Complete	38
20	Silencer Assly	40
21	Starter Assly	42
22	Magneto, C.D.I. & H.T. Coil	44
23	Seat Assly / Seat Lock	46
24	Engine Mountings	48
25	Frame and Frame Fitting	50
26	Swing Arm/Rear Shock Absorber (125 ST)	52
27	Swing Arm/Rear Shock Absorber (125T & 100T)	54
28	Rider Foot Rest	56
29	Pillion Foot Rest & Holder	58
30	Mudguard- Front & Rear	60

Index

Plate No.	Description	Page No.
31	Stand Assembly	62
32	Tyre/ Tube / Rim	64
33	Front Hub (Disc brake)	66
34	Front Hub (Drum brake)	68
35	Front Master Cylinder (Disc brake)	70
36	Front Disc Brake (Disc brake)	72
37	Rear Hub (125 ST)	74
38	Rear Hub (125 T & 100 T)	76-78
39	Rear Brake Pedal	80
40	Handle Bar Assly	82-84
41	Front Fork	86-88
42	Painted Parts & Decals (125 ST & 100 T)	90-92
43	Painted Parts & Decals (125 T)	94-96
44	Petrol Tank, Cap Tank & Gauge Fuel	98
45	Fittings - Petrol Tank, Side Cover & Cover Seat	100
46	Meter Assly.	102
47	Control Cables	104
48	Chain Case (125 ST)	106
49	Chain Case (125 T & 100T)	108
50	Head Lamp & Fairing	110
51	Indicator Light Assly.	112
52	Tail Lamp Assly. / Front No. Plate	114
53	Electrical Equipments	116
54	Tool Kit	118
55	Accessories / Grab Handle	120
	Kits List	121-126
	Amendment Sheet (Parts Added)	
	Amendment Sheet (Parts Deleted)	
	Part Index	127

Pictorial Index

PLATE NO. : 1 COVER CYLINDER HEAD	PAGE NO. 1

PLATE NO. : 2 CYLINDER HEAD	PAGE NO. 3

PLATE NO. : 3 VALVE	PAGE NO. 5

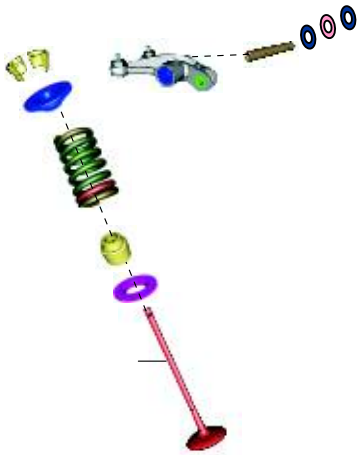

PLATE NO. : 4 CAMSHAFT / TENSIONER	PAGE NO. 7

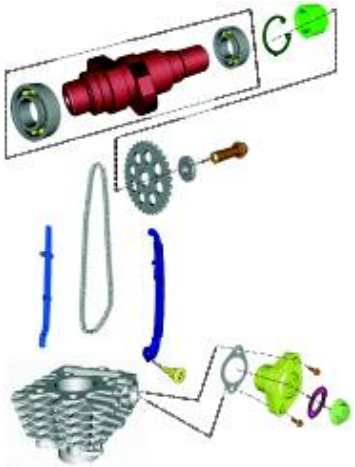

Pictorial Index

PIAGGIO-125ST/T/100T

PLATE NO. : 5 CYLINDER & PISTON	PAGE NO. 9

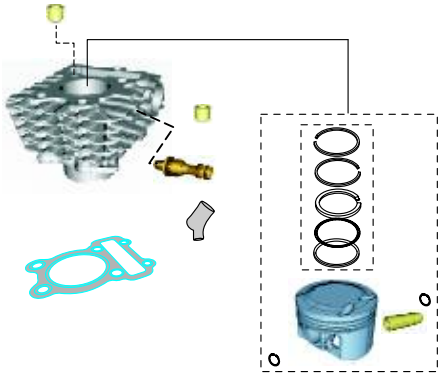

PLATE NO. : 6 CRANKSHAFT	PAGE NO. 11

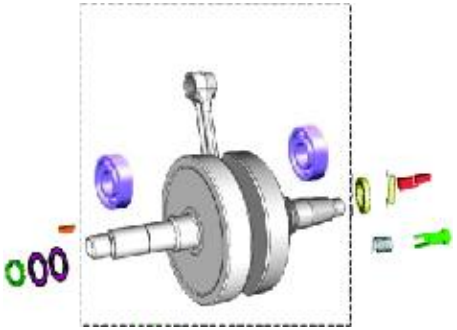

PLATE NO. : 7 TRANSMISSION	PAGE NO. 13

PLATE NO. : 8 CHANGE DRUM / SHIFT FORK	PAGE NO. 15

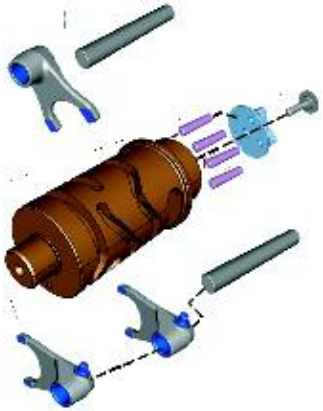

PLATE NO. : 9 GEAR CHANGE MECHANISM	PAGE NO. 17

PLATE NO. : 10 ENGINE ASSLY & CRANKCASE RH	PAGE NO. 19

PLATE NO. : 11 CRANKCASE LH	PAGE NO. 21

PLATE NO. : 12 OIL PUMP	PAGE NO. 23

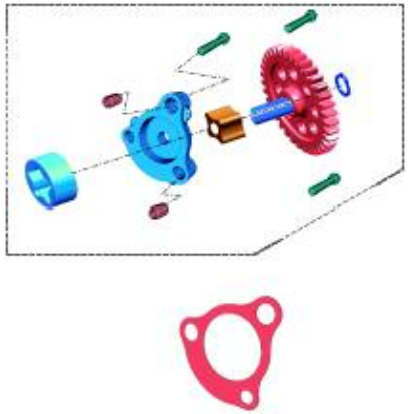

Pictorial Index

PLATE NO. : 13 KICK STARTER MECHANISM	PAGE NO. 25

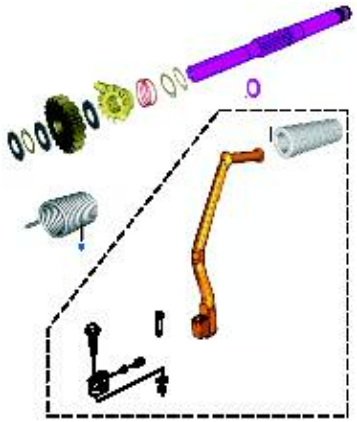

PLATE NO. : 14 COVER CLUTCH	PAGE NO. 27

PLATE NO. : 15 COVER MAGNETO	PAGE NO. 29

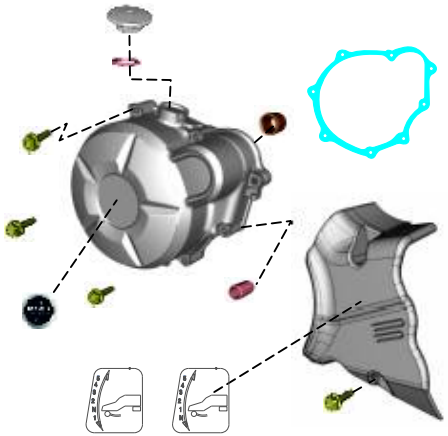

PLATE NO. : 16 CLUTCH ASSLY	PAGE NO. 31

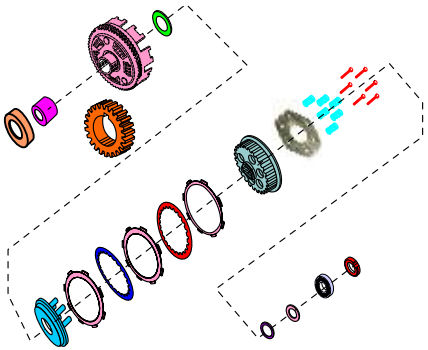

PLATE NO. : 17 CARBURETTOR (125 ST & T)	PAGE NO. 33
PLATE NO. : 18 CARBURETTOR (100 T)	PAGE NO. 35
PLATE NO. : 19 AIR CLEANER COMPLETE	PAGE NO. 37
PLATE NO. : 20 SILENCER ASSLY	PAGE NO. 39

Pictorial Index

PLATE NO. : 21 STARTER ASSLY	PAGE NO. 41
PLATE NO. : 22 MAGNETO, C.D.I. & H.T. COIL	PAGE NO. 43
PLATE NO. : 23 SEAT ASSLY / SEAT LOCK	PAGE NO. 45
PLATE NO. : 24 ENGINE MOUNTINGS	PAGE NO. 47

PLATE NO. : 25 FRAME AND FRAME FITTINGS	PAGE NO. 49

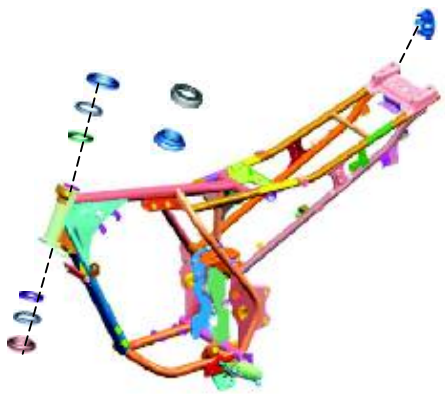

PLATE NO. : 26 SWING ARM / REAR SHOCK ABSORBER (125 ST)	PAGE NO. 51

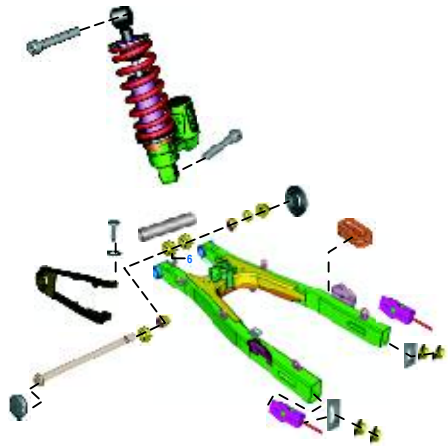

PLATE NO. : 27 SWING ARM / REAR SHOCK ABSORBER (125 T & 100 T)	PAGE NO. 53

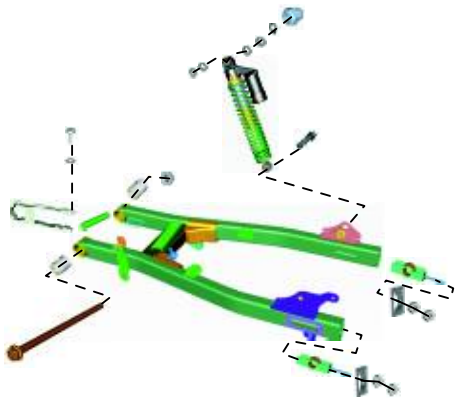

PLATE NO. : 28 RIDER FOOT REST	PAGE NO. 55

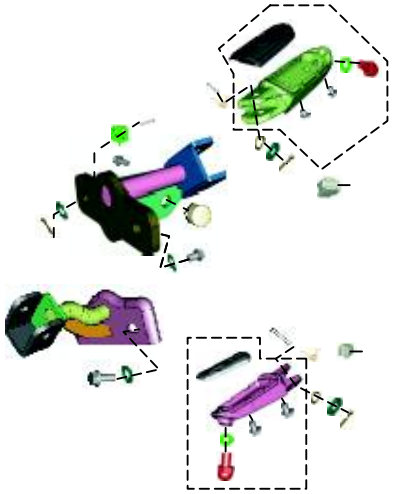

Pictorial Index

PLATE NO. : 29 PILLION FOOT REST / HOLDER STEP	PAGE NO. 57

PLATE NO. : 30 MUDGUARD - FRONT & REAR	PAGE NO. 59

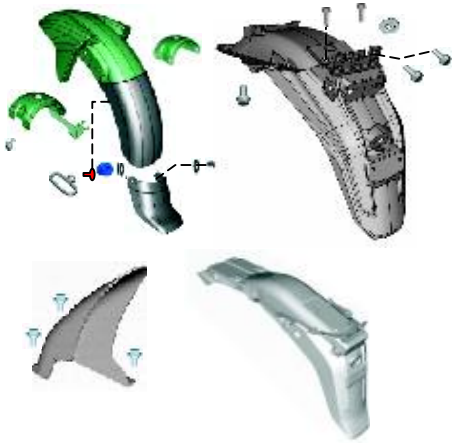

PLATE NO. : 31 STAND ASSEMBLY	PAGE NO. 61

PLATE NO. : 32 TUBE / TYRE / RIM	PAGE NO. 63

PLATE NO. : 33 FRONT HUB (Disc Brake)	PAGE NO. 65

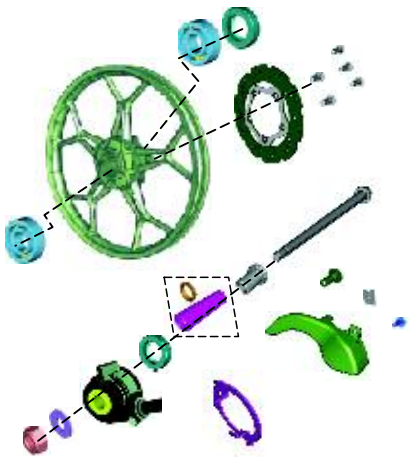

PLATE NO. : 34 FRONT HUB (Drum Brake)	PAGE NO. 67

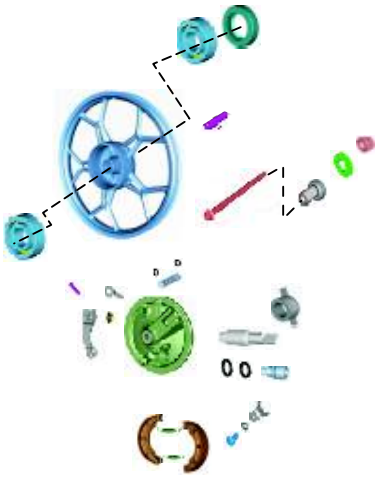

PLATE NO. : 35 FRONT MASTER CYL (Disc Brake)	PAGE NO. 69

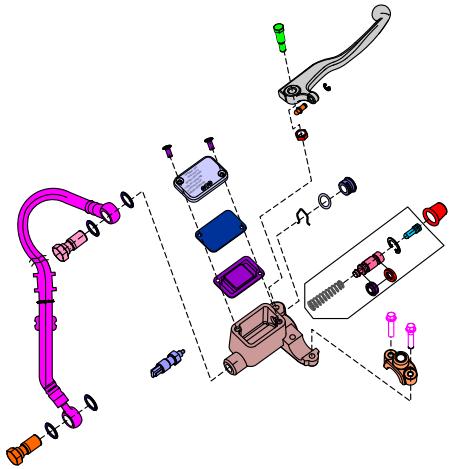

PLATE NO. : 36 FRONT DISC BRAKE (Disc Brake))	PAGE NO. 71

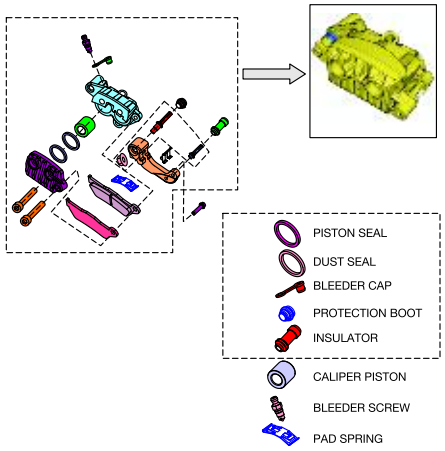

Pictorial Index

PLATE NO. : 37 REAR HUB (125 ST)	PAGE NO. 73

PLATE NO. : 38 REAR HUB (125 T & 100 T)	PAGE NO. 75, 77

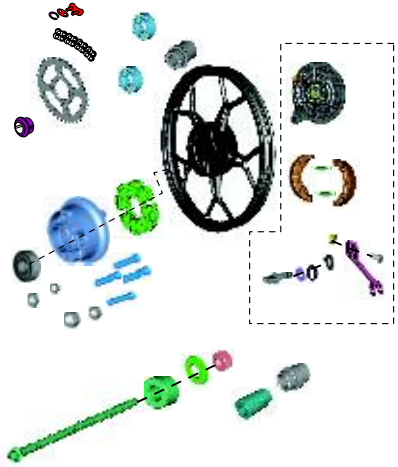

PLATE NO. : 39 REAR BRAKE PEDAL	PAGE NO. 79

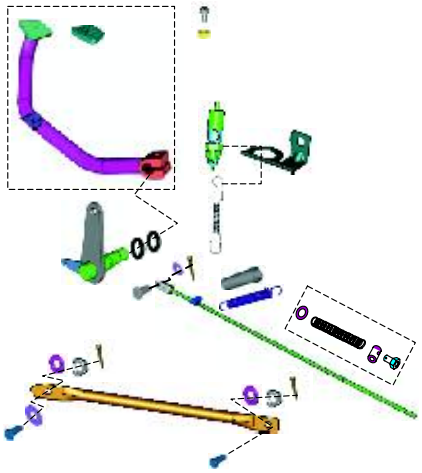

PLATE NO. : 40 HANDLE BAR ASSEMBLY	PAGE NO. 81, 83

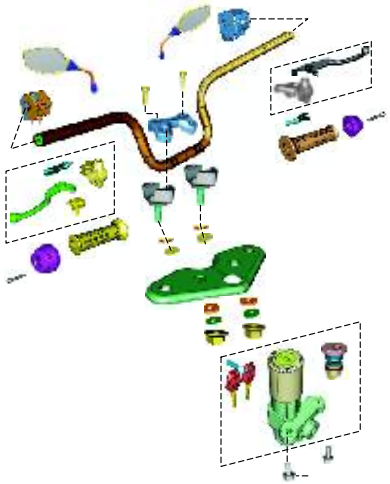

PLATE NO. : 41 FRONT FORK	PAGE NO. 85, 87
PLATE NO. : 42 PAINTED PARTS AND DECALS (125 ST & 100 T)	PAGE NO. 89, 91
PLATE NO. : 43 PAINTED PARTS AND DECALS (125 T)	PAGE NO. 93, 95
PLATE NO. : 44 PETROL TANK, CAP TANK AND GAUGE FUEL	PAGE NO. 97

Pictorial Index

PLATE NO. : 45 FITTINGS - PETROL TANK COVER, SIDE COVERS & COVER SEAT	PAGE NO. 99
PLATE NO. : 46 METER ASSEMBLY	PAGE NO. 101
PLATE NO. : 47 CONTROL CABLES	PAGE NO. 103
PLATE NO. : 48 CHAIN CASE (125 ST)	PAGE NO. 105

PLATE NO. : 49 CHAIN CASE (125 T &100 T)	PAGE NO. 107
PLATE NO. : 50 HEAD LAMP & FAIRING	PAGE NO. 109
PLATE NO. : 51 INDICATOR LIGHT ASSEMBLY	PAGE NO. 111
PLATE NO. : 52 TAIL LAMP ASSLY / FRONT NUMBER PLATE	PAGE NO. 113

Pictorial Index

PLATE NO. : 53 ELECTRICAL EQUIPMENTS	PAGE NO. 115
PLATE NO. : 54 TOOL KIT	PAGE NO. 117
PLATE NO. : 55 ACCESSORIES / GRAB HANDLE	PAGE NO. 119

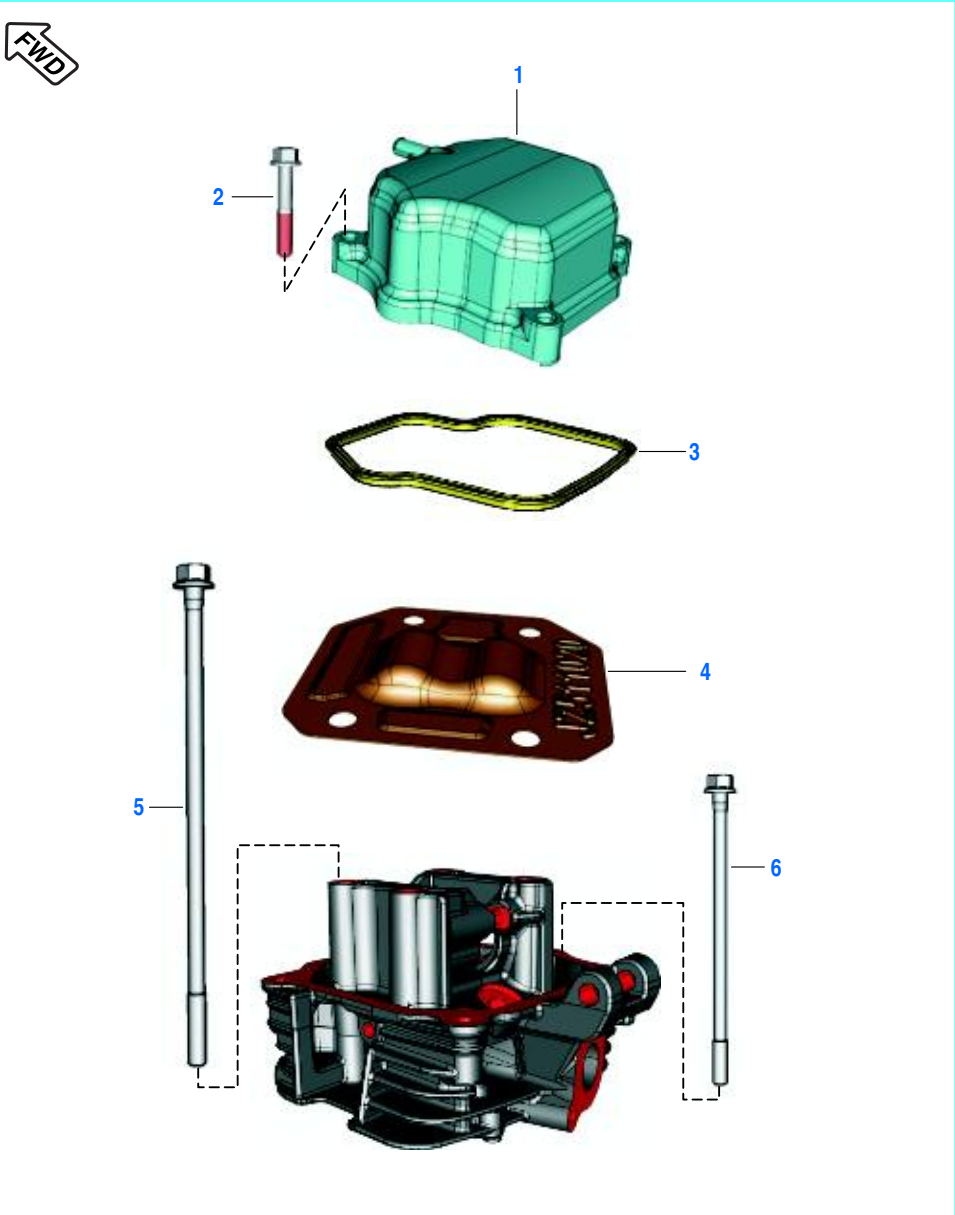

FWD Front Wheel Direction

Plate No.: 1

Cover Cylinder Head

No.	Part No.	Description	Qty.			Remarks
			125 ST	125 T	100 T	
1	JZ 5110 21	Cylinder Head Cover Comp	1	1	1	With Gasket
2	59 0400 38	Bolt	4	4	4	
3	JD 5110 10	Gasket Head Cover	1	1	1	
4	PA 5110 39	Plate Cylinder Head	1	1	1	
5	JA 5110 08	Bolt Head Mounting	4	4	4	
6	59 0400 50	Flanged Bolt M8X1.25X148L	1	1	1	

Brand ID: 001MC649 (DISCOVER 125 ST)
Brand ID: 001MC661 (DISCOVER 125 T)
Brand ID: 001MC639 (DISCOVER 100 T)

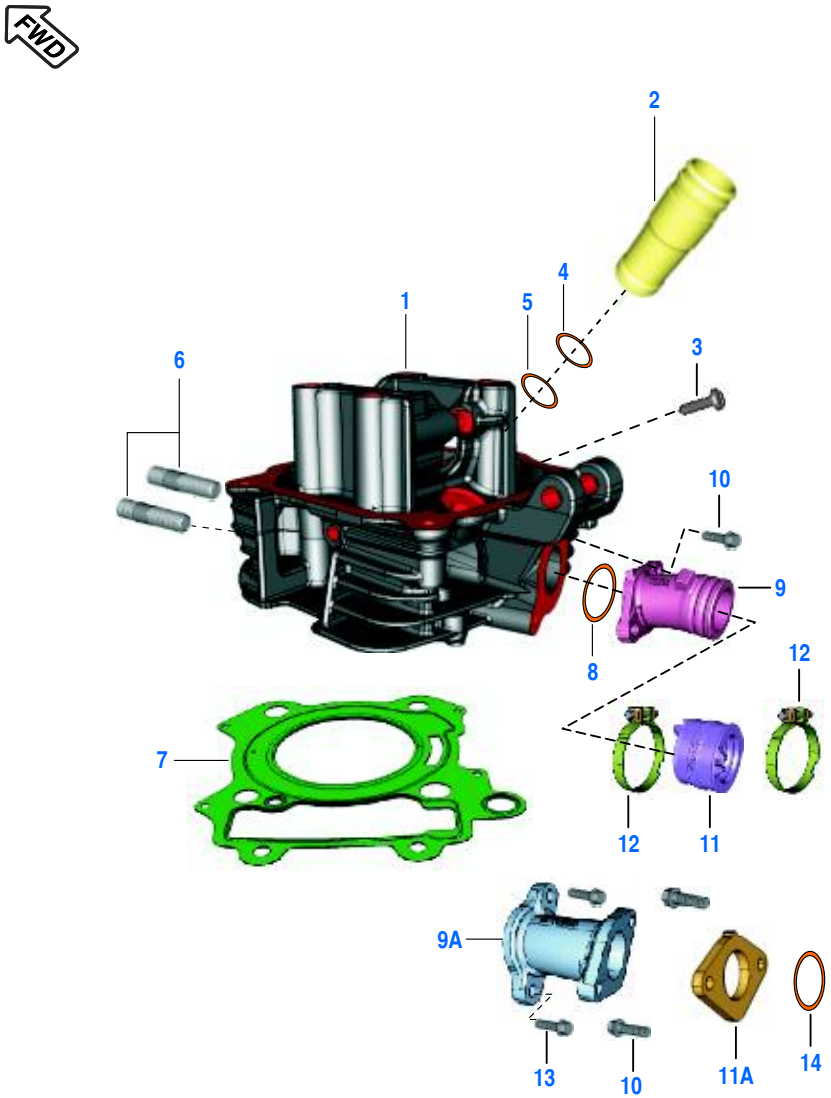

Front Wheel Direction

Plate No.: 2

Cylinder Head

No.	Part No.	Description	Qty. 125 ST	Qty. 125 T	Qty. 100 T	Remarks
1	36 JZ00 79	Kit Assly Cylinder Head	1	1	--	Refer Page No.121
	36 PA00 96	Kit Assly Cylinder Head	--	--	1	Refer Page No.125
2	JD 5110 04	Sleeve Spark Plug	1	1	--	
	JB 5110 18	Sleeve Spark Plug	--	--	1	
3	39 2608 01	Screw - Grub - M5X0.8X7	1	1	1	
4	39 1283 21	Ring - O	1	1	1	
5	39 2629 21	O-Ring	1	1	1	
6	39 1660 05	Stud - M8	2	2	--	
	JA 5110 28	Stud M8X1.25X451	--	--	2	
7	JD 5110 08	Gasket Cylinder Head	1	1	--	
	JB 5110 19	Gasket Cylinder Head	--	--	1	
8	39 2539 21	Ring - O	1	1	1	
9	JZ 5814 05	Intake Manifold	1	1	--	
9A	PA 5814 03	Manifold PTE 20	--	--	1	
10	JA 5814 06	Bolt Flange M6X1X25L	2	2	4	
11	JZ 5812 29	Sleeve Carburettor	1	--	–	
	JZ 5812 38	Sleeve Carburettor	--	1	–	
11A	PA 5812 05	Insulator	--	--	1	
12	AA 1210 71	Clamp Carburettor	2	2	--	
13	LA D000 11	Bolt Flange M6X1X20L	--	--	2	
14	LJ A000 11	O-Ring	--	--	1	

Brand ID: 001MC649 (DISCOVER 125 ST)
Brand ID: 001MC661 (DISCOVER 125 T)
Brand ID: 001MC639 (DISCOVER 100 T)

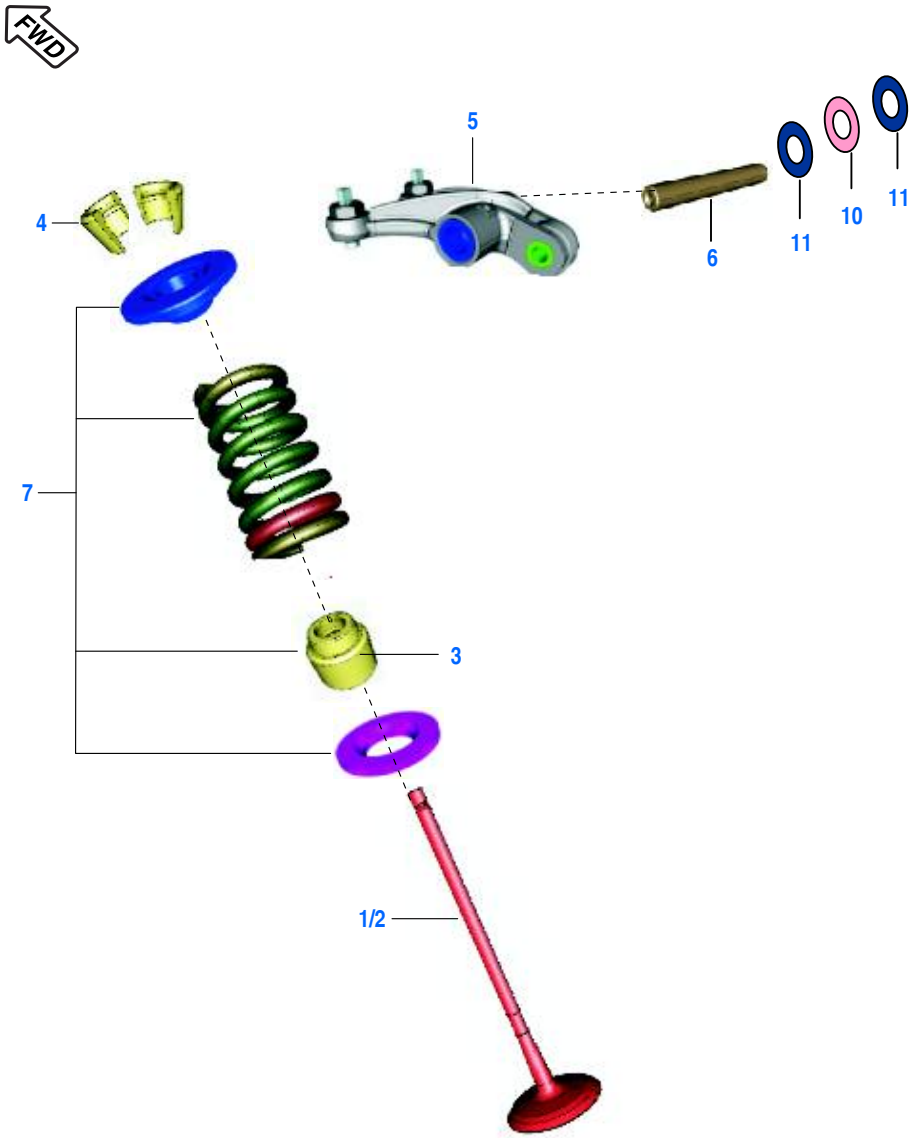

FWD Front Wheel Direction

Plate No.: 3

Valve

No.	Part No.	Description	Qty.			Remarks
			125 ST	125 T	100 T	
1	JE 5112 00	Valve Intake	2	2	--	
	PA 5112 28	Valve Intake	--	--	2	
2	JE 5112 01	Valve Exhaust	2	2	--	
	PA 5112 29	Valve Exhaust	--	--	2	
3	39 2017 19	Seal - Oil	4	4	4	
4	DG 1010 29	Collet	8	8	8	
5	JE 5112 04	Rocker Arm With Roller	2	2	--	
6	JD 5112 09	Shaft Rocker Arm Intake	2	2	--	
	JA 5112 11	Shaft Rocker Arm Intake	--	--	2	
7	36 JE00 01	Kit Valve Repair	4	4	--	Refer Page No. 121
	36 PA00 94	Kit Valve Repair	--	--	4	Refer Page No. 123
8	PA 5112 32	Assly Rocker Arm Inlet	--	--	1	N.I.
9	PA 5112 34	Assly Rocker Arm Exhaust	--	--	1	N.I.
10	PA 5110 54	Wave Washer	--	--	2	From 24.03.2013
11	PA 5110 55	Plain Washer	--	--	4	From 24.03.2013

Brand ID: 001MC649 (DISCOVER 125 ST)
Brand ID: 001MC661 (DISCOVER 125 T)
Brand ID: 001MC639 (DISCOVER 100 T)

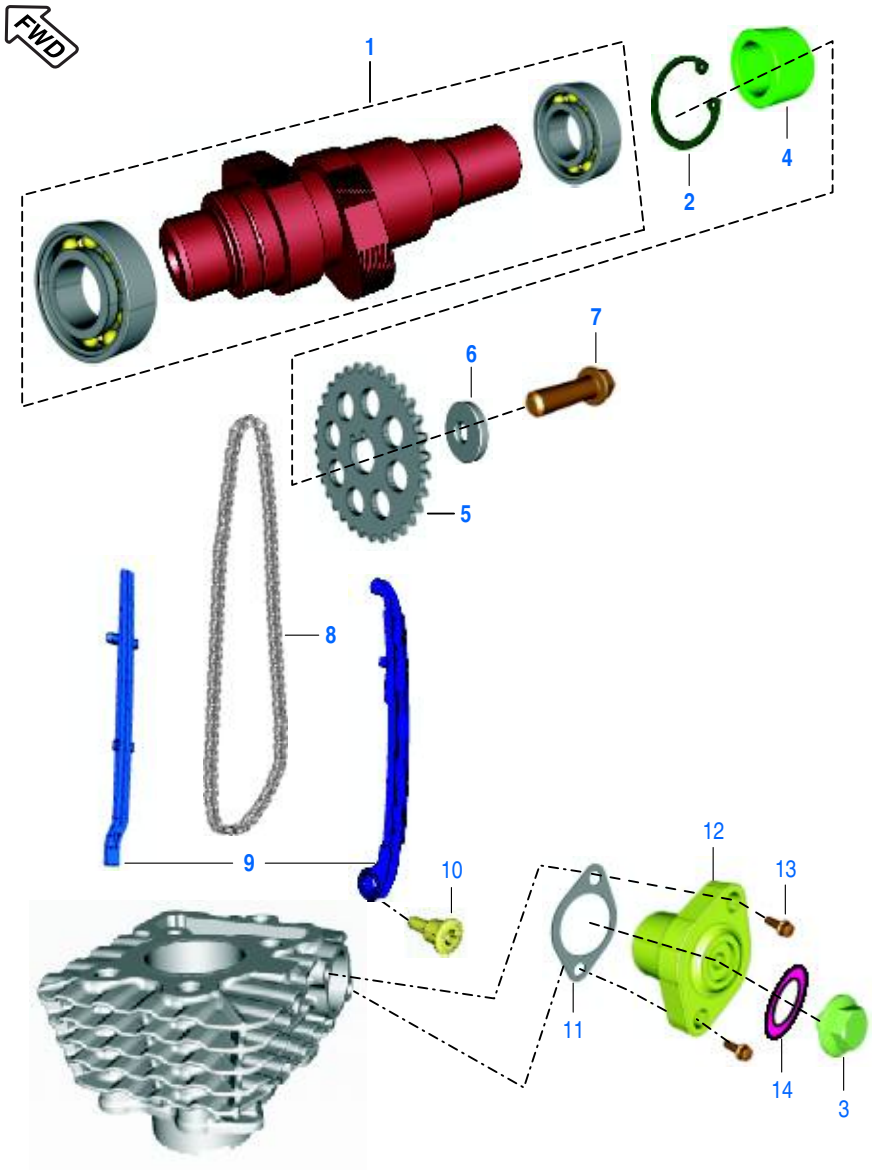

FWD Front Wheel Direction

Plate No.: 4

Camshaft / Tensioner

No.	Part No.	Description	Qty.			Remarks
			125 ST	125 T	100 T	
1	JE 5112 06	Camshaft Complete	1	1	--	
	PA 5112 15	Camshaft Assly	--	--	1	
2	39 0594 17	Circlip	1	1	1	
3	JA 5210 18	Bolt	1	1	1	
4	JA 5112 16	Spacer Cam Sprocket (3.3)	1	1	1	
5	DS 1012 76	Sprocket - Cam shaft (3.3)	1	1	1	
6	DH 1010 48	Washer- Special: Camshaft	1	1	1	
7	59 0400 31	Bolt	1	1	1	
8	DS 1099 05	Cam Chain (3.3)	1	--	1	
	JE 5112 30	Cam Chain (Straight)	--	1	--	
9	36 JZ00 81	Kit Chain Guide (3.3)	1	--	1	Refer Page No. 124
	36 PA01 15	Kit Chain Guide (Straight)	--	1	--	Refer Page No. 126
10	DH 1013 92	Tensioner Pivot Bolt	1	1	1	
11	CS 1011 28	Gasket	1	1	1	
12	JA 5210 17	Chain Tensioner (Black)	1	1	--	
	JE 5210 16	Chain Tensioner	--	--	1	
13	JA 5210 19	Bolt	2	2	2	
14	39 2669 21	Ring - 'O' (ID 10.15X1.5)	1	1	1	

Brand ID: 001MC649 (DISCOVER 125 ST)
Brand ID: 001MC661 (DISCOVER 125 T)
Brand ID: 001MC639 (DISCOVER 100 T)

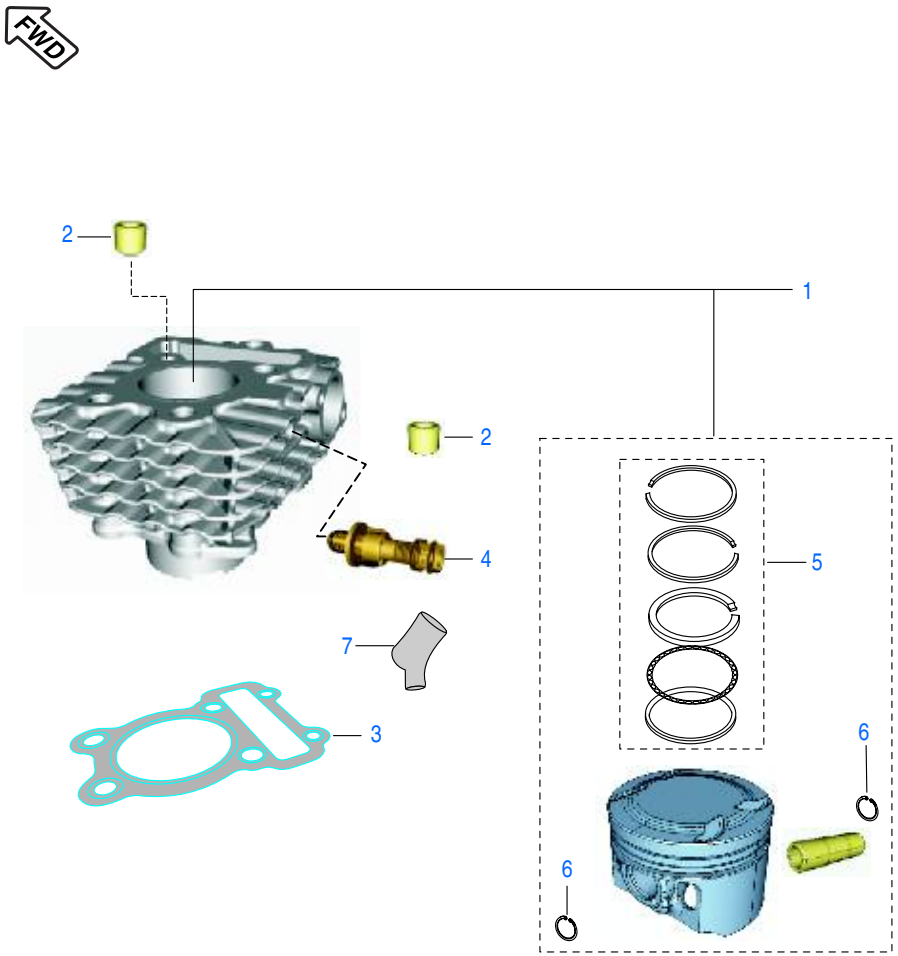

Front Wheel Direction

Plate No.: 5

Cylinder and Piston

No.	Part No.	Description	Qty.			Remarks
			125 ST	125 T	100 T	
1	36 JZ00 74	Kit Block Piston	1	1	--	Refer page no. 121
	36 PA00 93	Kit Block Piston	--	--	1	Refer page no. 124
2	39 1000 06	Pin - Hollow Dowel	2	2	2	
3	JD 5210 02	Gasket Cylinder Block	1	1	1	
4	JW 3514 00	Thermal Sensor	1	1	1	
5	36 JE00 02	Kit Piston Ring	1	1	--	Refer page no. 122
	36 PA00 03	Kit Piston Ring	--	--	1	Refer page no. 124
6	DP 1011 65	Ring Snap	2	2	--	
	PA 5212 14	Circlip Piston	--	--	2	
7	JB 4022 02	Grommet - Thermal sensor	1	1	1	

Brand ID: 001MC649 (DISCOVER 125 ST)
Brand ID: 001MC661 (DISCOVER 125 T)
Brand ID: 001MC639 (DISCOVER 100 T)

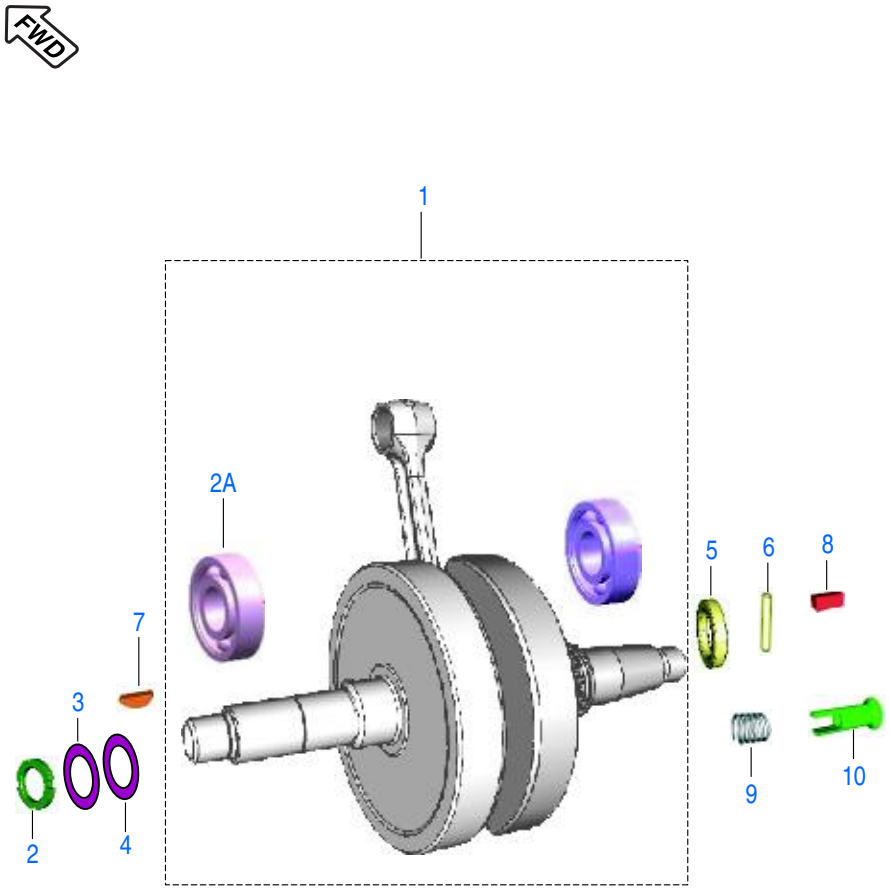

Plate No.: 6

Crankshaft

No.	Part No.	Description	Qty.			Remarks
			125 ST	125 T	100 T	
1	JE 5310 08	Crankshaft Assembly (3.3)	1	1	–	
	PA 5310 21	Crankshaft Assembly	--	--	1	
2	59 1500 14	Nut Flange	2	2	2	
2A	JE 5310 01	Bearing Ball	1	1	--	
2A	39 1864 20	Bearing Ball	--	--	1	
3	59 1200 03	Washer Belleville	2	2	2	
4	59 1100 08	Washer	1	1	1	
5	JD 5310 04	Spacer Crank Shaft	1	1	1	
6	JA 5310 15	Pin(C/S Plunger)	1	1	1	
7	31 1011 73	Key -Woodruff	1	1	1	
8	DS 1011 54	Key	1	1	1	
9	JA 5310 12	Spring	1	1	1	
10	JB 5310 21	Plunger Oil Crankshaft	1	1	1	

FWD Front Wheel Direction

Brand ID: 001MC649 (DISCOVER 125 ST)
Brand ID: 001MC661 (DISCOVER 125 T)
Brand ID: 001MC639 (DISCOVER 100 T)

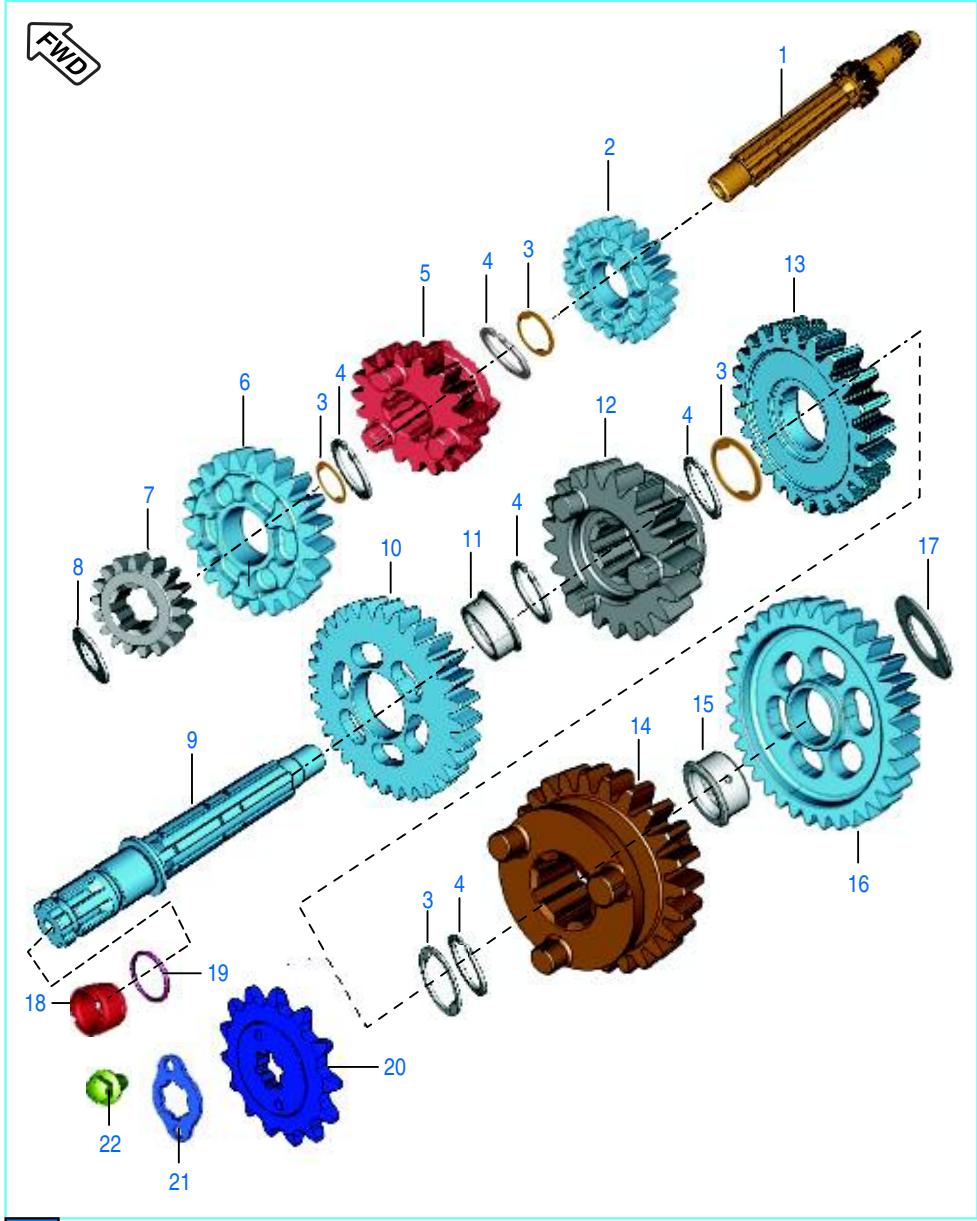

FWD Front Wheel Direction

Plate No.: 7

Transmission

No.	Part No.	Description	Qty.			Remarks
			125 ST	125 T	100 T	
1	JZ 5510 10	Shaft Input W/O Gun Hole	1	1	1	
2	JZ 5512 02	Gear 4th Drive	1	1	1	
3	JA 5510 02	Spline Washer	4	4	4	
4	39 0987 17	Ring - Snap	5	5	5	
5	JE 5512 09	Gear 3rd Drive	1	1	1	
6	JZ 5512 13	Gear 5th Drive	1	1	1	Forging Route
7	JZ 5512 00	Gear 2nd Drive	1	1	1	
8	JA 5510 04	Washer Thrust 2nd Drive	1	1	1	
9	JZ 5510 08	Shaft Output Forging Route	1	1	1	
10	JZ 5512 06	Gear 2nd Driven	1	1	1	
11	JZ 5512 10	Bush 2nd Driven	1	1	1	
12	JZ 5512 11	Gear 5th Driven	1	1	1	Forging Route
13	JE 551210	Gear 3rd Driven	1	1	1	
14	JZ 551208	Gear 4th Driven	1	1	1	
15	JZ 5512 05	Bush 1st Driven	1	1	1	
16	JZ 5512 04	Gear 1st Driven	1	1	1	
17	JA 5510 08	Washer Thrust	1	1	1	
18	JA 5510 09	Collar Sprocket Drive	1	1	1	
19	59 2100 24	'O' Ring	1	1	1	
20	JZ 5510 04	Sprocket Output	1	1	1	
21	DU 1012 13	Plate Lock-sprocket output	1	1	1	
22	39 1981 04	Bolt Flanged	2	2	2	

Brand ID: 001MC649 (DISCOVER 125 ST)
Brand ID: 001MC661 (DISCOVER 125 T)
Brand ID: 001MC639 (DISCOVER 100 T)

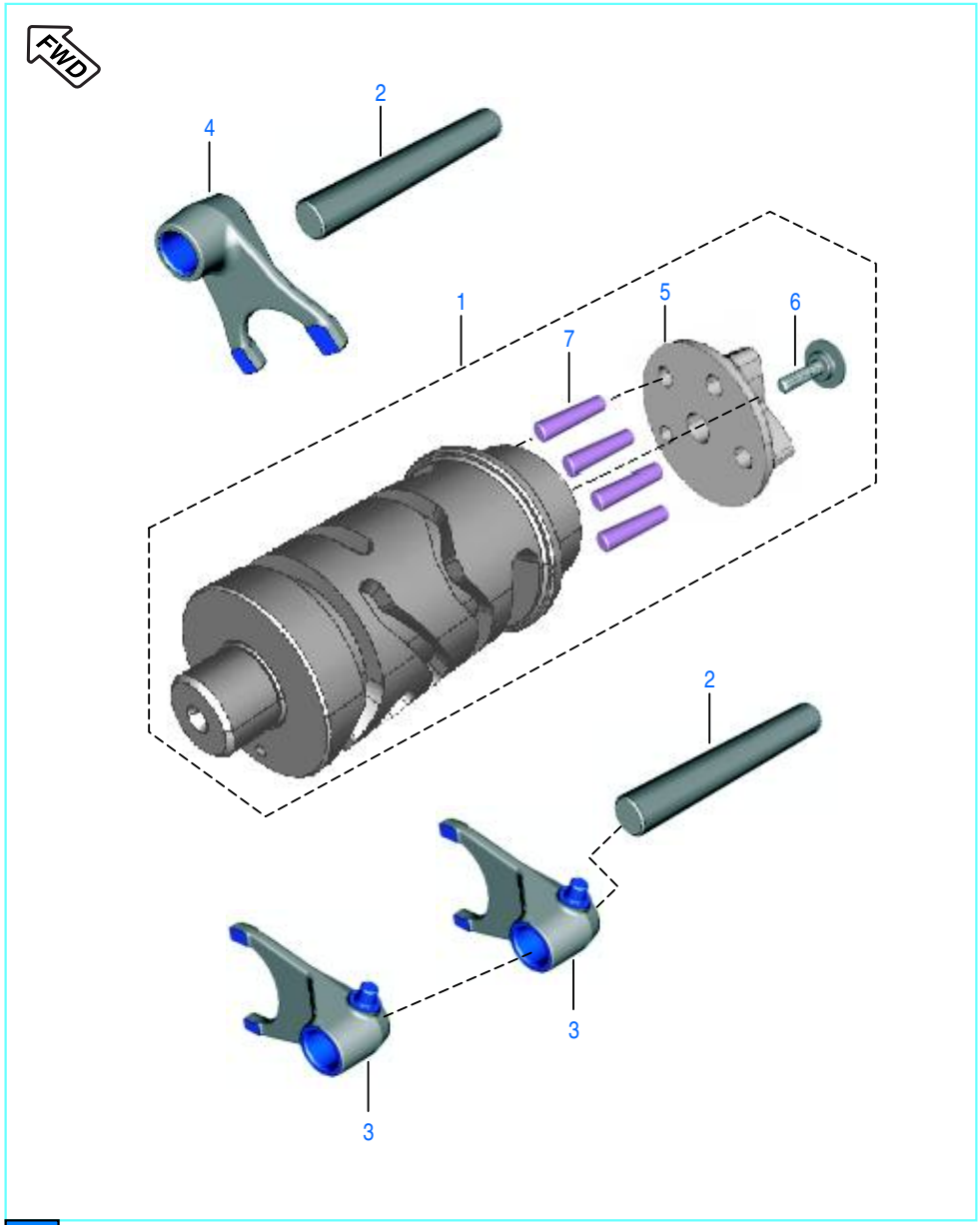

Front Wheel Direction

Plate No.: 8

Change Drum / Shift Fork

No.	Part No.	Description	Qty.			Remarks
			125 ST	125 T	100 T	
1	JE 5610 03	Drum Comp Gear Shift	1	--	--	
	PA 5610 02	Drum Comp Gear Shift	--	1	1	
2	JD 5610 06	Shaft Gear Fork Shift	2	2	2	
3	JD 5610 04	Fork Gear Shift Output	2	2	2	
4	JZ 5610 02	Fork Input Disco-H	1	1	1	
5	JD 5610 02	Cam Drum Change	1	1	1	
6	JD 5610 11	Special bolt	1	1	1	
7	39 0992 06	Dowl	4	4	4	

Brand ID: 001MC649 (DISCOVER 125 ST)
Brand ID: 001MC661 (DISCOVER 125 T)
Brand ID: 001MC639 (DISCOVER 100 T)

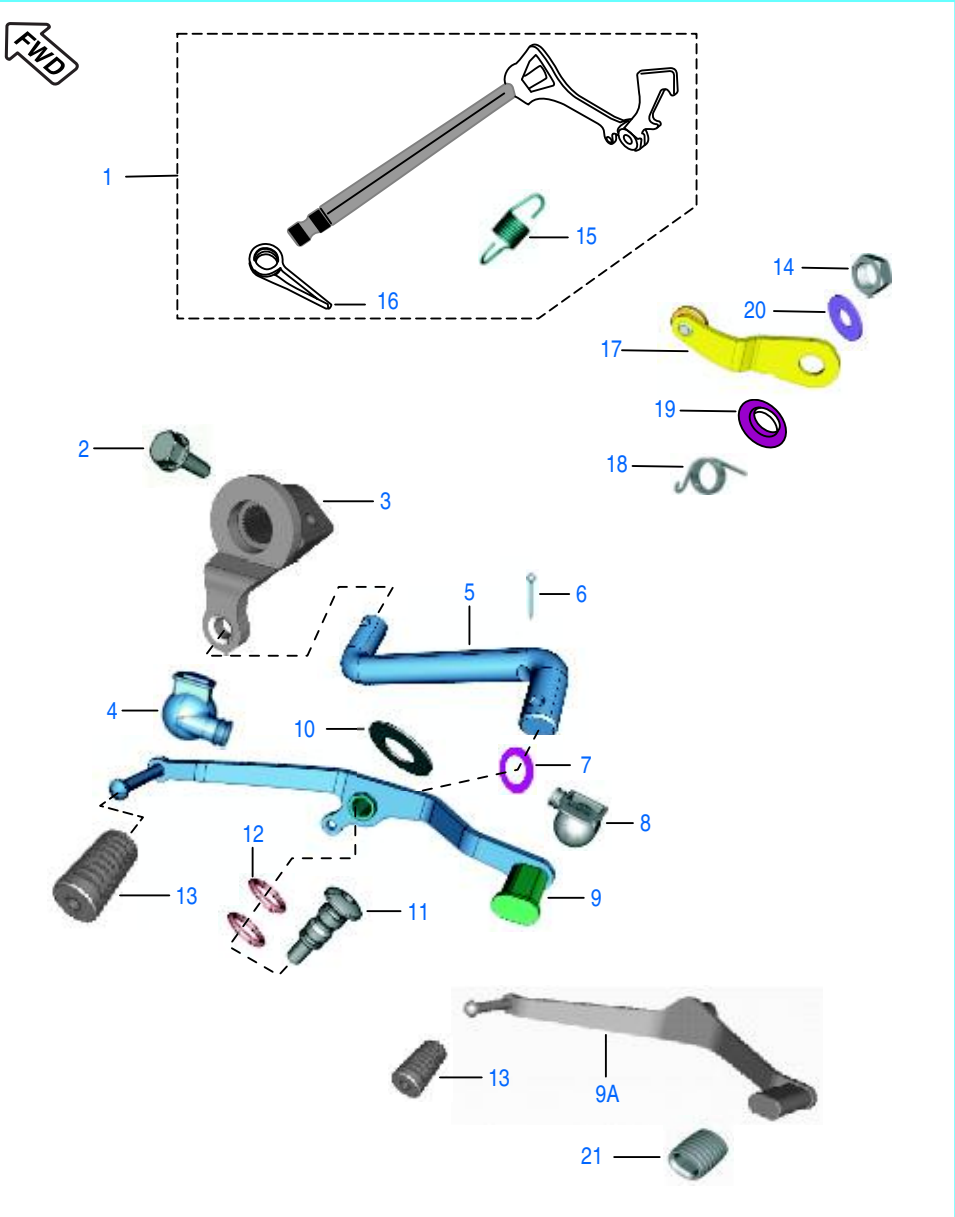

FWD Front Wheel Direction

Plate No.: 9

Gear Change Mechanism

No.	Part No.	Description	Qty.			Remarks
			125 ST	125 T	100 T	
1	52 JZ02 64	Lever Comp Gear Shift	1	1	1	
2	39 2453 04	Bolt - Flange :- M6	1	--	1	
3	JZ 5612 01	Lever Change Arm	1	--	--	
4	JZ 5614 07	Boot Gear Change Arm	1	--	--	
5	JZ 5614 04	Tie Rod	1	--	--	
6	39 0808 08	Pin	2	--	--	
7	JD 5614 16	Washer Nylon	2	--	--	
8	JZ 5614 05	Boot Change Lever	1	--	--	
9	JZ 5614 02	Lever Complete Change	1	--	–	With Damper
9A	PA 5614 02	Gear Shift Lever	--	1	1	Without Damper
10	JL 5614 10	Washer Plain	1	--	--	
11	JL 5614 09	Bolt	1	--	--	
12	01 1009 05	'O' Ring	2	--	--	
13	DH 1015 09	Damper	1	1	1	
14	39 0817 15	Nut - Hexagon	1	1	1	With Flange : M6
15	JW 5612 06	Extension Spring	1	1	1	
16	JW 5612 08	Spring Gear Shift Return	1	1	1	
17	JD 5612 03	Inhibitor Comp. Gear Shift	1	1	1	
18	JD 5612 04	Spring (Inhibitor)	1	1	1	
19	JA 5612 09	Step Washer	1	1	1	
20	39 2704 11	Washer (Spring Steel)	1	1	1	
21	DG 1013 39	Damper	--	1	1	

Brand ID: 001MC649 (DISCOVER 125 ST)
Brand ID: 001MC661 (DISCOVER 125 T)
Brand ID: 001MC639 (DISCOVER 100 T)

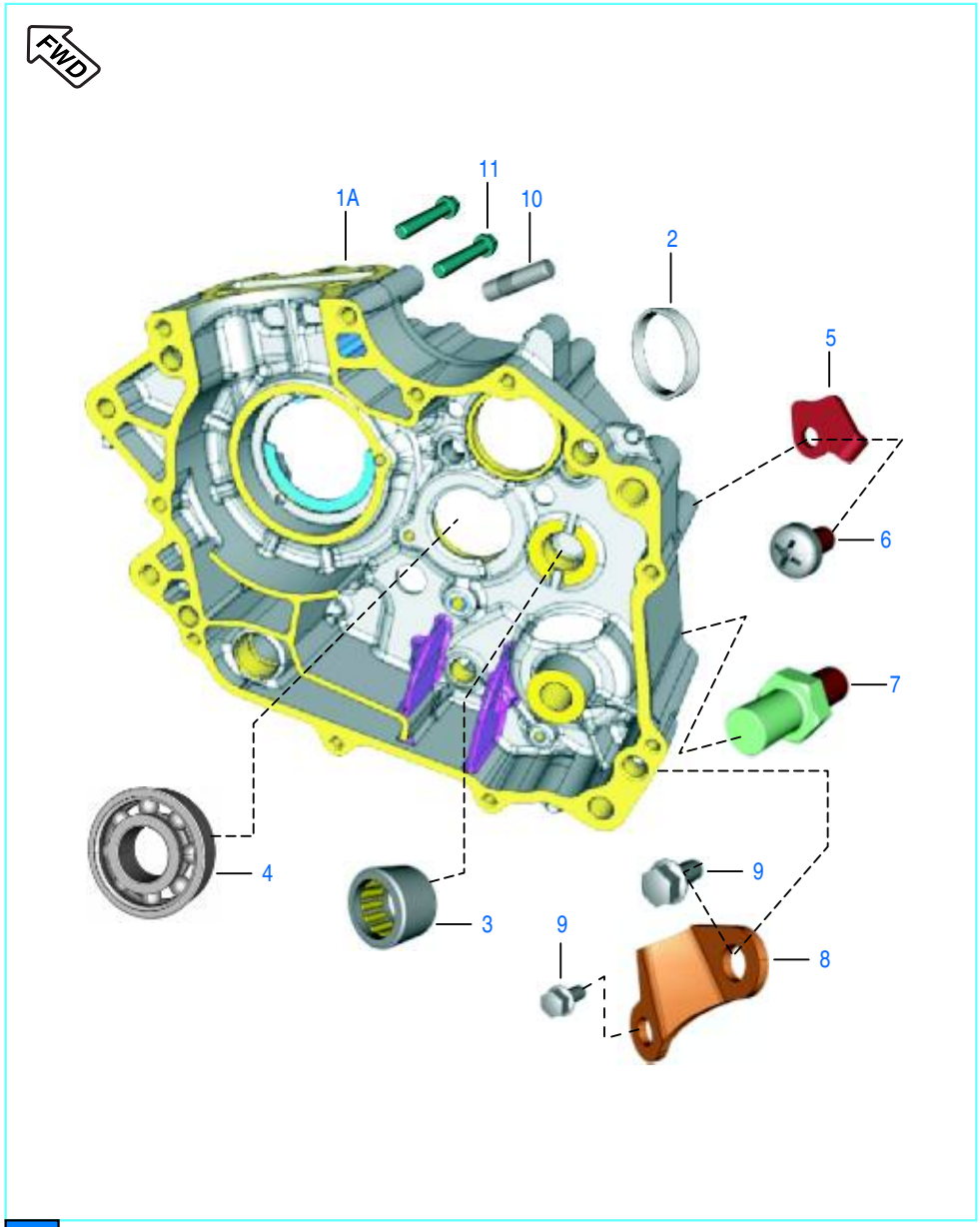

Front Wheel Direction

Plate No.: 10

Engine Assembly / Crankcase RH

No.	Part No.	Description	Qty.			Remarks
			125 ST	125 T	100 T	
1	JE 5010 06	Engine Assly - 125 ST	1	–	--	N.I.
	JE 5010 17	Engine Assly - 125 T	–	1	--	
	PA 5010 07	Engine Assly - 100 T	--	--	1	N.I.
1A	36 JZ00 78	Kit assly C'Case RH	1	1	--	Ref. Page No. 121
	PA 5410 11	Assly C'Case RH	--	--	1	Ref. Page No. 125
2	PF 5410 18	Bushing Drum	1	1	1	
3	JA 5410 11	Needle Roller Bearing	1	1	1	HK1212
4	59 2000 36	Bearing - Ball 6203 HN3 C3	1	1	1	
5	JA 5410 10	Stopper plate input bearing	1	1	1	
6	DH 1013 80	Screw - Pan Pre-coated	1	1	1	(M6X12)-39
7	JA 5410 14	Bolt Shift Change	1	1	1	
8	JA 5410 12	Guide Kick	1	1	1	
9	39 1964 04	Bolt Flange	2	2	2	
10	52 JA00 27	Stud (JA541015) Pre-coated	1	1	1	
11	JA 5412 35	Bolt	2	2	2	

Brand ID: 001MC649 (DISCOVER 125 ST)
Brand ID: 001MC661 (DISCOVER 125 T)
Brand ID: 001MC639 (DISCOVER 100 T)

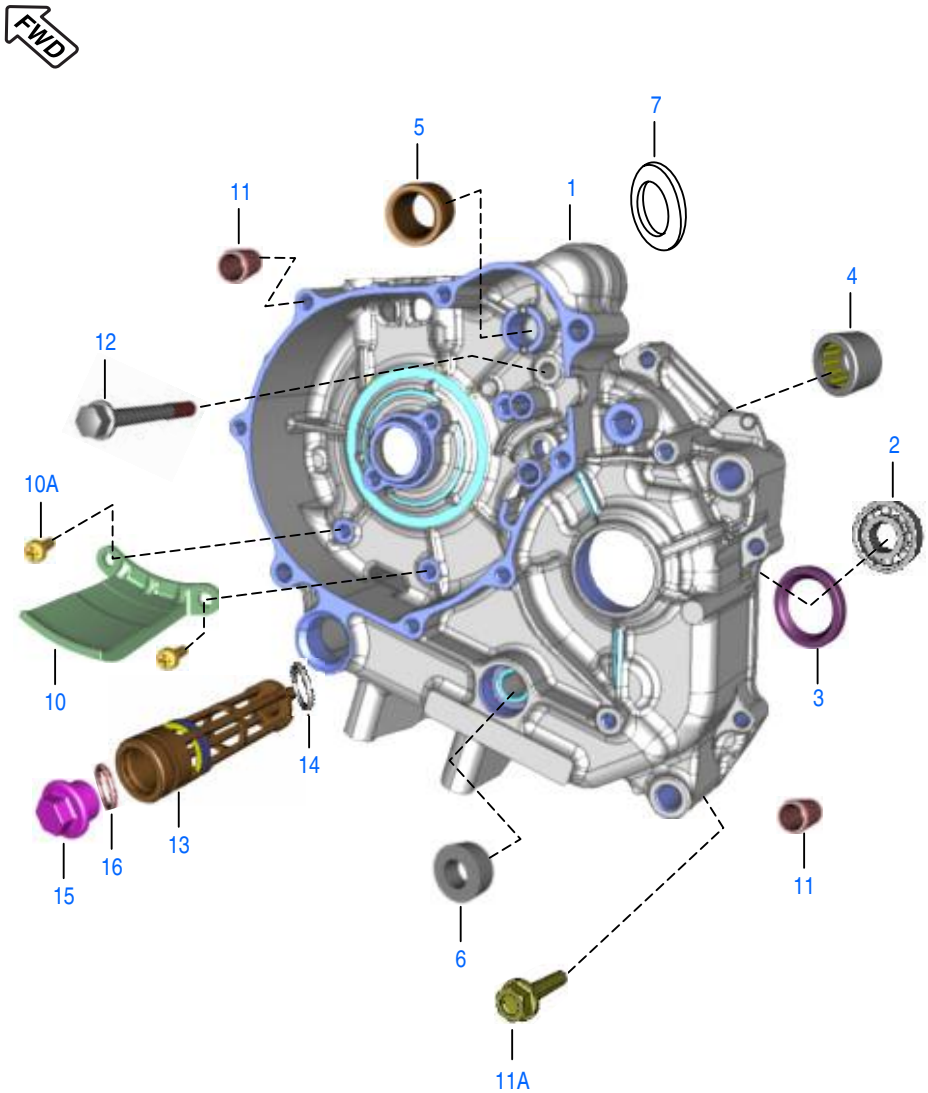

Front Wheel Direction

Plate No.: 11

Crankcase LH

No.	Part No.	Description	Qty.			Remarks
			125 ST	125 T	100 T	
1	36 JZ00 77	Kit Assly C' Case LH	1	1	--	Refer Page No. 121
	36 JZ00 28	Kit Assly C' Case LH	--	--	1	Refer Page No. 124
2	59 2000 36	Ball Bearing	1	1	1	
3	39 1715 19	Seal - Oil	1	1	1	
4	39 2562 20	Bearing - Needle Roller	1	1	1	13X19X12
5	JA 5410 05	Bush Bendix	1	1	1	
6	39 2190 19	Seal - Oil	1	1	1	
7	JD 5410 00	Damper C'Shaft	1	1	--	
	JA 5410 27	Damper C'Shaft	--	--	1	
8	31 2010 81	Switch - Neutral	1	1	1	N.I.
9	DH 1012 64	Neutral Switch AL Washer	1	1	1	N.I.
10	JA 5410 34	Stopper Gear Starter-	1	1	1	Aluminium
10A	39 0747 01	Screw Pan Cross - M6	1	2	2	
11	39 0999 06	Pin - Hollow Dowel	4	4	4	
11A	59 0400 38	Bolt Flange	6	6	6	
12	39 1759 04	Bolt - M6 X 55	1	1	1	
13	JG 5710 24	Mesh Oil Filter Assy_G2	1	1	1	With 'O' ring
14	LJ A000 04	'O' ring-Strainer	1	1	1	
15	JA 5410 21	Cap Strainer	1	1	1	
16	59 2100 23	'O' ring Cap Strainer	1	1	1	

Brand ID: 001MC649 (DISCOVER 125 ST)
Brand ID: 001MC661 (DISCOVER 125 T)
Brand ID: 001MC639 (DISCOVER 100 T)

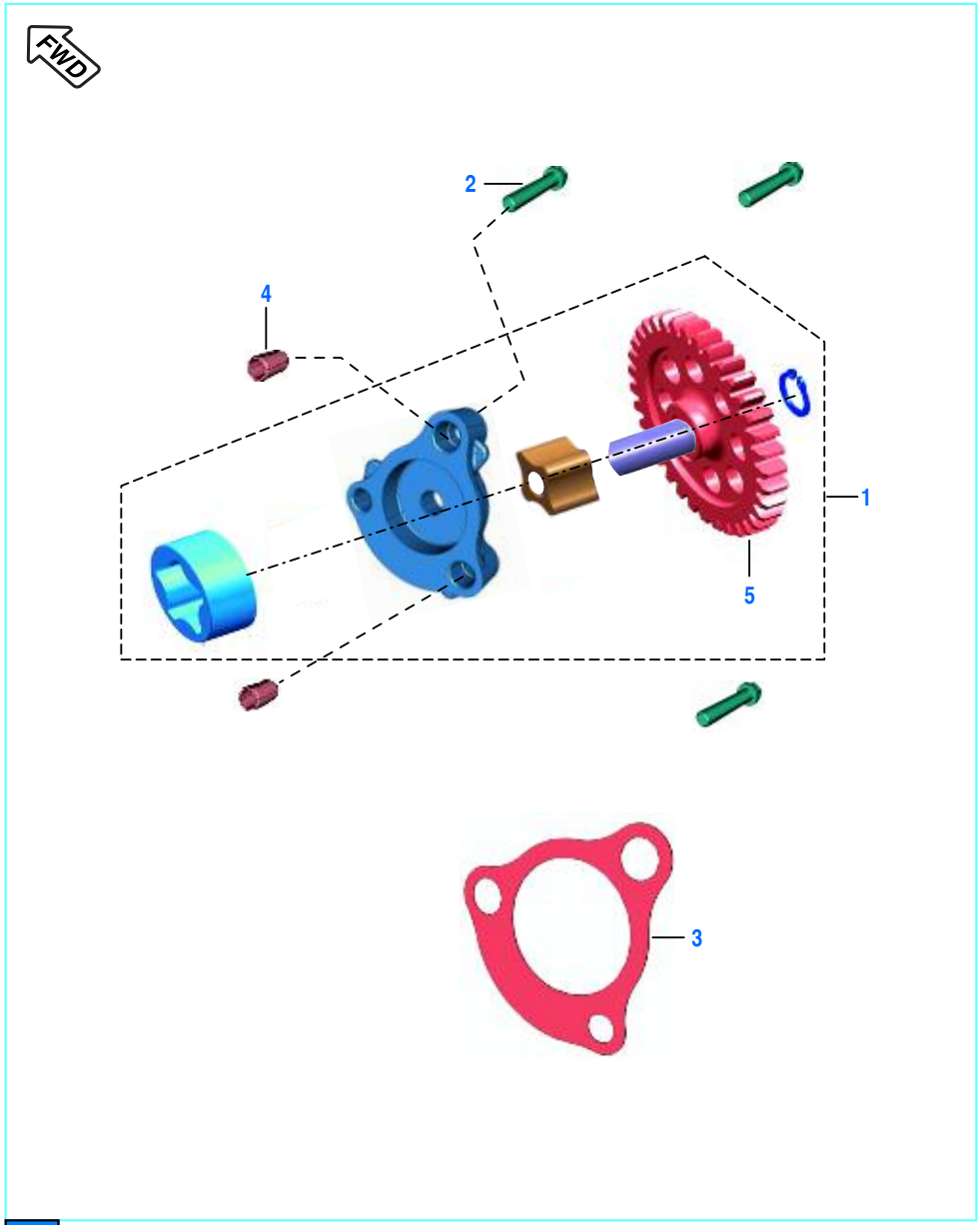

Front Wheel Direction

Plate No.: 12

Oil Pump

No.	Part No.	Description	Qty.			Remarks
			125 ST	125 T	100 T	
1	JZ 5710 00	Assembly Oil Pump	1	1	--	
	JB 5710 05	Assembly Oil Pump	--	--	1	
2	FD 1010 78	Screw Pan Cross :	3	3	3	Pre-Coated
3	JA 5410 16	Gasket Case Oil Pump	1	1	1	
4	39 0999 06	Pin Dowel	2	2	2	
5	JZ 5710 01	Gear Oil Pump Driven	1	1	--	
	JB 5710 06	Gear Oil Pump Driven	--	--	1	

Brand ID: 001MC649 (DISCOVER 125 ST)
Brand ID: 001MC661 (DISCOVER 125 T)
Brand ID: 001MC639 (DISCOVER 100 T)

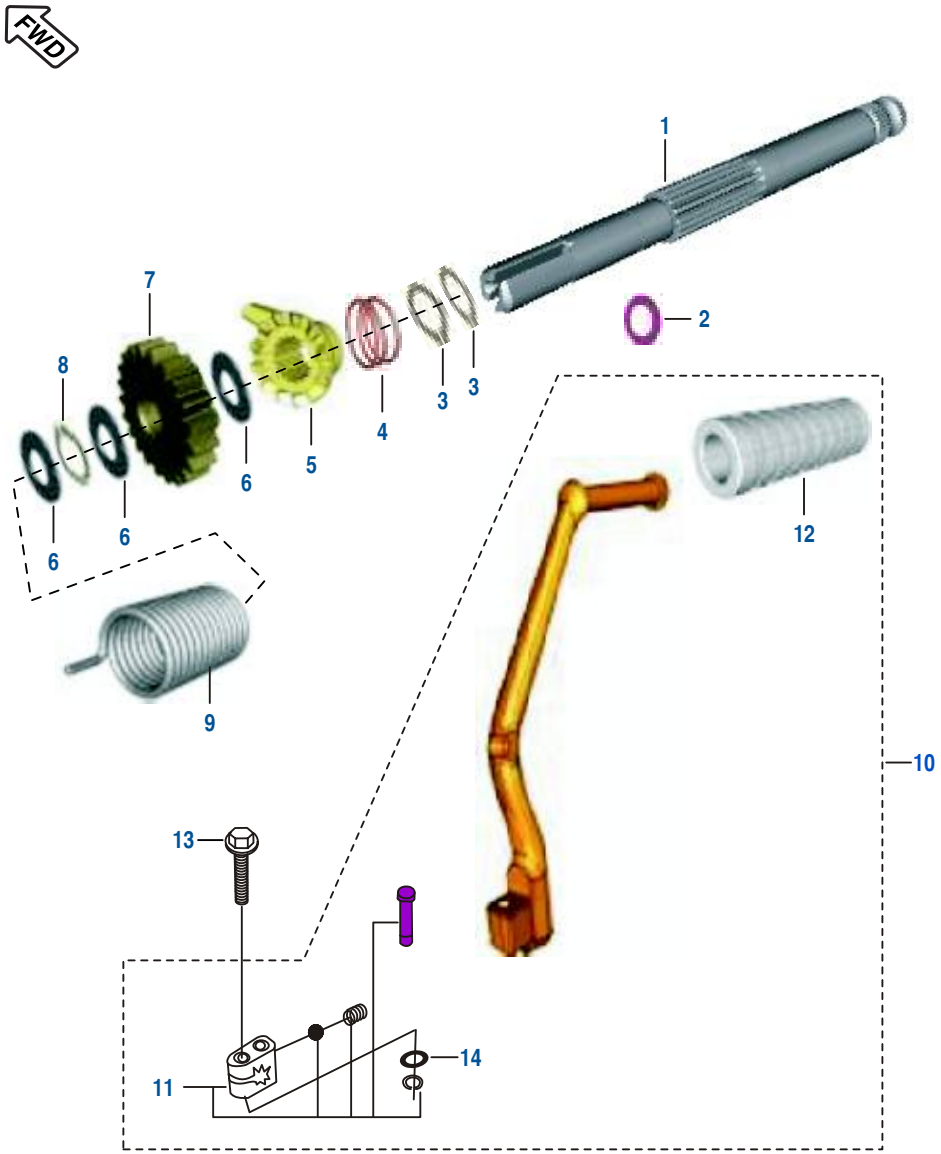

Front Wheel Direction

Plate No.: 13

Kick Starter Mechanism

No.	Part No.	Description	Qty.			Remarks
			125 ST	125 T	100 T	
1	JE 6210 01	Kick Shaft	1	1	1	
2	JA 6210 06	Washer Thrust	1	1	1	
3	39 0738 17	Circlip	2	2	2	
4	DS 1011 17	Spring Kick Starter Ratchet	1	1	1	
5	JA 6210 02	Ratchet	1	1	1	
6	39 0993 11	Washer Plain	3	3	3	
7	JZ 6210 00	Gear starter pinion	1	1	1	
8	39 2408 17	External Circlip	1	1	1	
9	JE 5410 08	Spring Kick Return	1	1	1	
10	JZ 6212 00	Assembly Kick Lever	1	1	1	
11	36 JZ00 98	Kit Boss Kick Lever	1	1	1	Refer Page No. 123
12	DD 1010 97	Damper	1	1	1	
13	JA 6212 06	Bolt	1	1	1	
14	22 1502 41	Plain Washer	1	1	1	

Brand ID: 001MC649 (DISCOVER 125 ST)
Brand ID: 001MC661 (DISCOVER 125 T)
Brand ID: 001MC639 (DISCOVER 100 T)

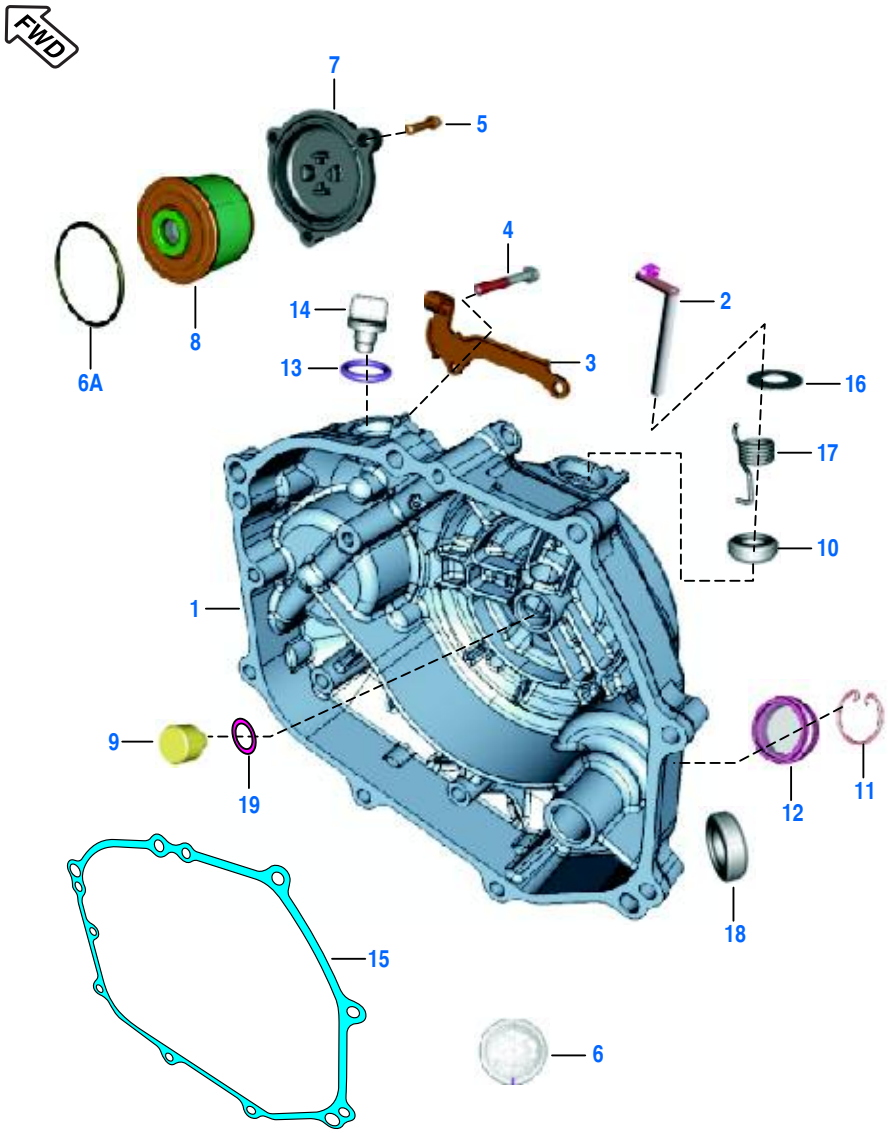

Front Wheel Direction

Plate No.: 14

Cover Clutch

No.	Part No.	Description	Qty. 125 ST	Qty. 125 T	Qty. 100 T	Remarks
1	36 JZ00 75	Kit Assly Clutch Cover	1	1	--	Refer Page No. 121
	36 PA00 99	Kit Assly Clutch Cover	--	--	1	Refer Page No. 124
2	JW 5410 05	Shaft Clutch Release Assly	1	1	1	
3	JW 5410 00	Bracket Clutch Cable	1	1	1	
4	59 0400 38	Bolt - Flange : M5	8	8	8	
5	JA 5210 19	Bolt	3	3	3	
6	JE 5412 31	Decal Clutch Cover	1	1	1	
6A	39 1671 21	Ring - 'O'	1	1	1	
7	JZ 5412 14	Cap Filter	1	1	1	
8	DD 1211 81	Element Oil Filter	1	1	1	
9	DP 1012 69	Rod-Push	1	1	--	
	PA 5514 05	Push Rod	--	--	1	
10	39 1041 19	Seal - Oil	1	1	1	
11	DS 1012 15	Clip - Wire	1	1	1	
12	DG 1014 18	Gauge	1	1	1	
13	JA 5412 25	O Ring Cap Oil Filler	1	1	1	
14	JA 5412 11	Cap Oil Filler	1	1	1	
15	JA 5412 12	Gasket Clutch Cover	1	1	1	
16	JA 5412 36	Plain Washer (12.5X24X0.8)	1	1	1	
17	JA 5412 37	Spring Torsion Cl. Cover	1	1	1	
18	30 1011 42	Seal - Oil (Kick Shaft)	1	1	1	
19	39 1561 21	Ring O'	--	--	1	

Brand ID: 001MC649 (DISCOVER 125 ST)
Brand ID: 001MC661 (DISCOVER 125 T)
Brand ID: 001MC639 (DISCOVER 100 T)

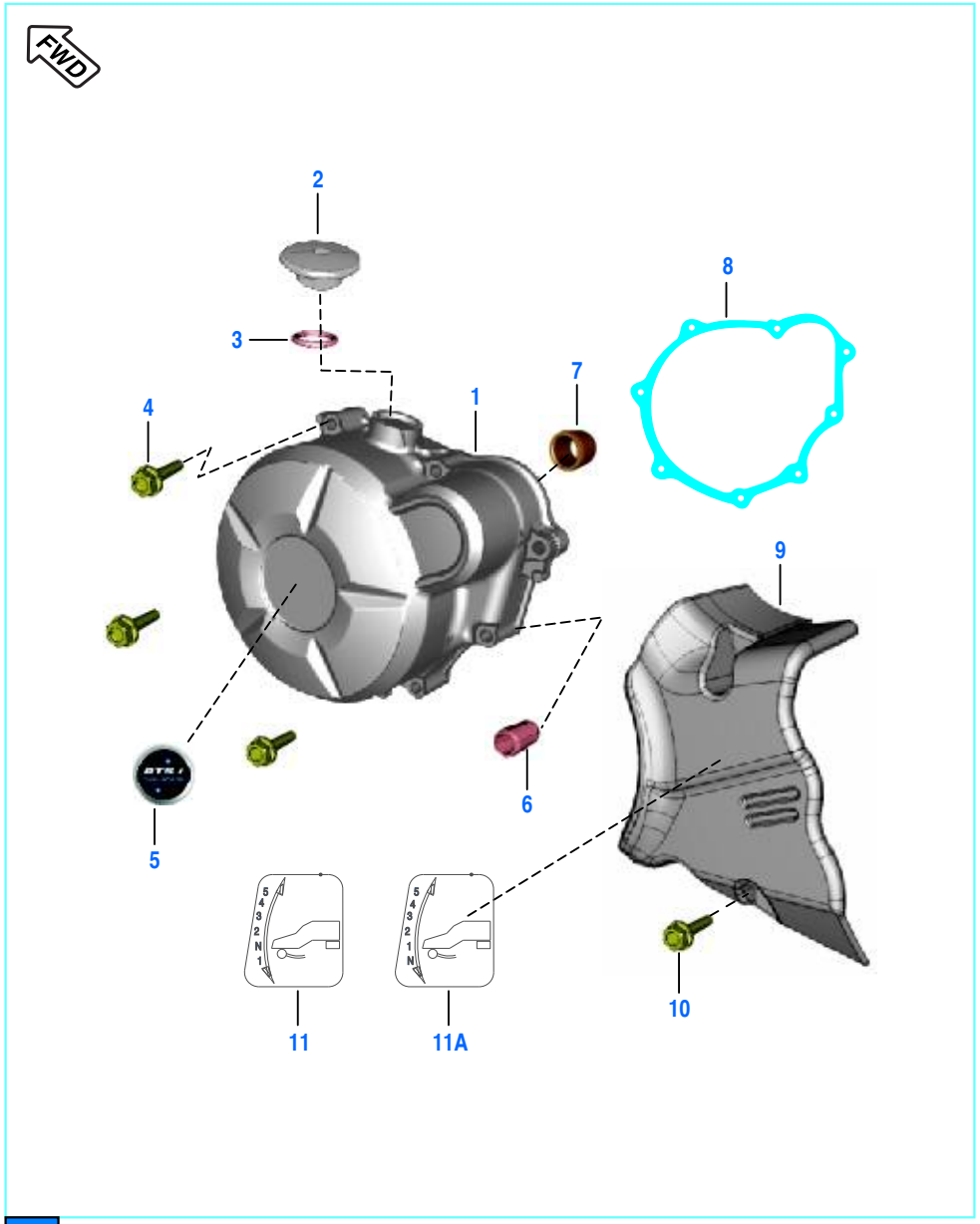

FWD Front Wheel Direction

Plate No.: 15

Cover Magneto

No.	Part No.	Description	Qty. 125 ST	Qty. 125 T	Qty. 100 T	Remarks
1	36 JB00 20	Kit Assly Cover Magneto	1	1	--	Refer Page No. 126
	JE 5412 33	Assly Cover Magneto	--	--	1	Bush+Dcl +Cap+`O'ring
2	JA 5412 33	Cap TDC finder	1	1	1	
3	30 1011 95	'O' ring	1	1	1	
4	JA 5410 44	Bolt - Flanged : Small	8	8	8	
5	JE 5412 30	Label Mag Cover	1	1	1	
6	39 0999 06	Dowl	2	2	2	
7	JA 5410 05	Bush Bendix	1	1	1	
8	JA 5412 05	Gasket Magneto Cover	1	1	1	
9	JZ 5412 26	Cover RR assly	1	–	–	Cover+Gear Shift Label
	JE 5412 47	Cover RR assly	--	1	–	Cover+Gear Shift Label
	PA 5412 09	Cover RR assly	--	--	1	Cover+Gear Shift Label
10	59 0400 38	Flange bolt	2	2	2	
11	DJ 1612 28	Gear Shift Label	1	1	--	
11A	PA 5412 10	Gear Shift Label	--	1	1	

Brand ID: 001MC649 (DISCOVER 125 ST)
Brand ID: 001MC661 (DISCOVER 125 T)
Brand ID: 001MC639 (DISCOVER 100 T)

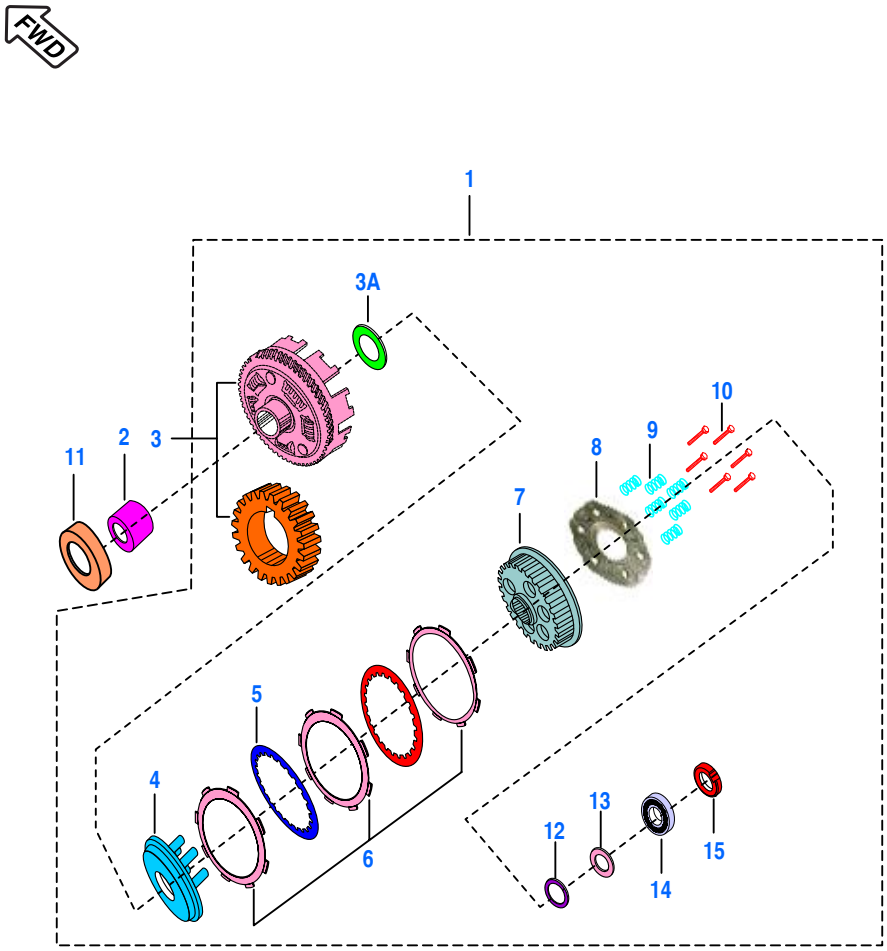

Plate No.: 16

Clutch Assly

No.	Part No.	Description	Qty.			Remarks
			125 ST	125 T	100 T	
1	JZ 5514 13	Assembly Clutch	1	1	--	
	PA 5514 04	Assembly Clutch D100T	--	--	1	
2	JA 5514 06	Collar Clutch	1	1	1	
3	36 JZ00 23	Kit Primary Drive & Driven	1	1	1	Refer Page No.121
3A	39 2600 11	Washer - Plain	1	1	1	
4	JB 5514 08	Wheel Clutch	1	1	1	
5	30 1010 96	Plate Cutch	4	4	4	
6	36 JZ00 99	Kit Friction Plate	1	1	1	Refer Page No.122
	36 JE00 24	Kit Friction Plate (Alternate)	1	1	1	Refer Page No.126
7	JB 5514 11	Hub Clutch	1	1	1	
8	JB 5514 12	Clutch Holder	1	1	1	
9	JZ 5514 15	Compression Spring	6	6	--	
	28 1012 14	Compression Spring	--	--	6	
10	39 0980 04	Flange Bolt	6	6	6	
11	JD 5514 00	Spacer Clutch Assembly	1	1	1	
12	JA 5514 20	Washer Plain	1	1	1	
13	JE 5514 09	Washer Belleville	1	1	1	
14	39 1001 20	Bearing - Ball	1	1	1	
15	JA 5310 07	Nut Crankshaft M14	1	1	1	

FWD Front Wheel Direction

Brand ID: 001MC649 (DISCOVER 125 ST)
Brand ID: 001MC661 (DISCOVER 125 T)
Brand ID: 001MC639 (DISCOVER 100 T)

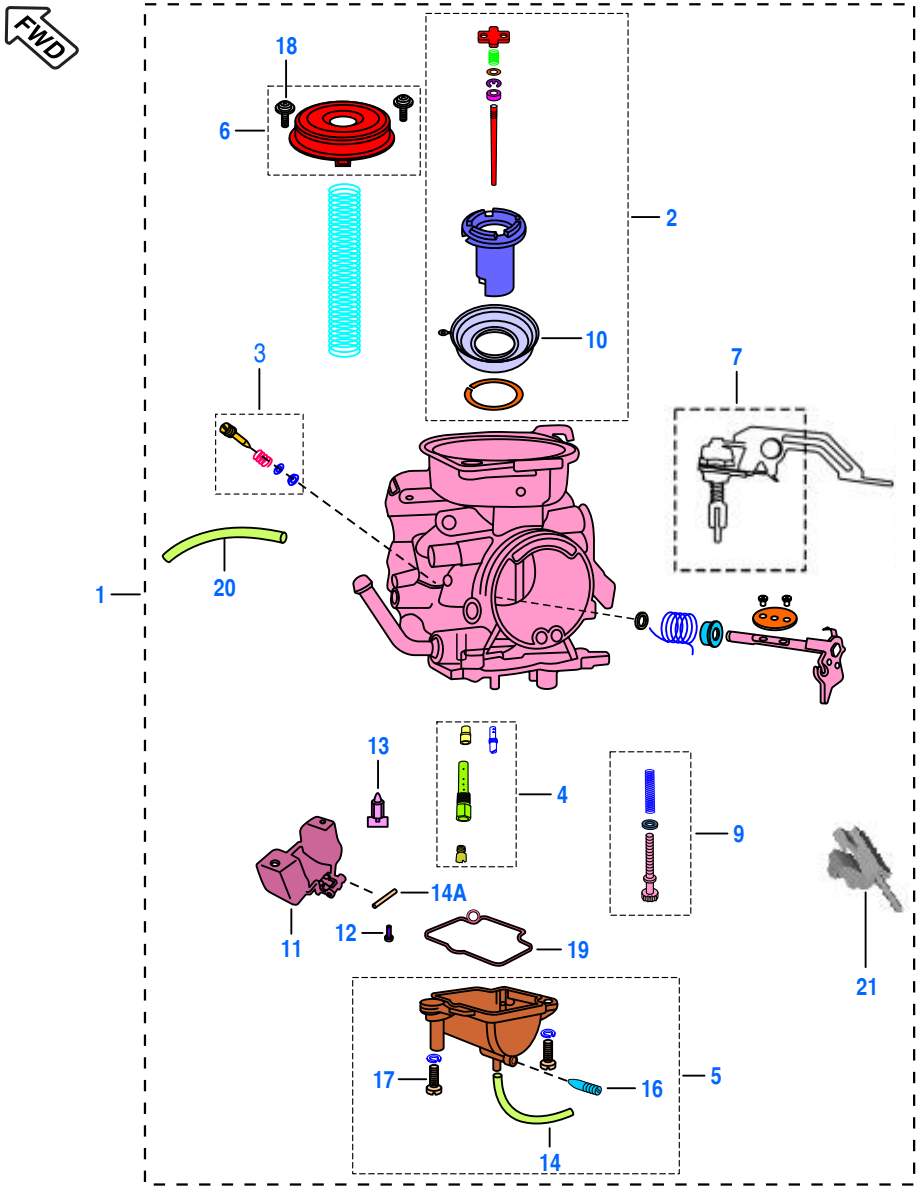

FWD Front Wheel Direction

Plate No.: 17

Carburetor Assembly (125 ST & T)

No.	Part No.	Description	Qty.			Remarks
			125 ST	125 T	100 T	
1	JE 5812 31	Assly Carburetor-125 ST	1	--	–	
	JE 5812 38	Assly Carburetor -125 T	--	1	–	
2	36 JE00 16	Kit Piston Valve	1	1	--	Refer Page No. 122
3	36 JE00 17	Kit Pilot Screw	1	1	--	Refer Page No. 122
4	36 JE00 18	Kit Jet-125 ST	1	--	–	Refer Page No. 122
	36 JE00 23	Kit Jet -125 T	--	1	–	
5	36 JE00 19	Kit Float Chamber Body	1	1	--	Refer Page No. 123
6	36 JE00 20	Kit Top Cap	1	1	--	Refer Page No. 123
7	36 JE00 21	Kit Plunger Assly	1	1	--	Refer Page No. 123
8	36 JE00 22	Kit O Ring & Gasket	1	1	--	Refer Page No. 122
9	DK 1210 41	Kit VC Screw	1	1	–	Refer Page No. 122
10	JE 5812 13	Diaphragm	1	1	--	
11	DH 1210 59	Float Assly	1	1	--	
12	DH 1210 64	Screw Needle Shaft	1	1	--	
13	DH 1210 93	Needle Assly	1	1	--	
14	JE 5812 23	Pipe Overflow	1	1	--	
14A	DH 1210 63	Pin	1	1	--	
15	DH 1210 41	Clip Drain Hose	1	1	--	N.I.
16	JE 5812 18	Drain Screw	1	1	--	
17	DP 1210 67	Screw Float Body	4	4	--	
18	DH 1211 76	Screw Diaphragm Cover	2	2	--	
19	DP 1210 59	Gasket Float Chamber	1	1	–	
20	DP 1210 18	Clamp	1	1	–	Towards Air Filter
21	JE 5812 37	Reed Switch Assembly	1	1	–	

Brand ID: 001MC649 (DISCOVER 125 ST)
Brand ID: 001MC661 (DISCOVER 125 T)
Brand ID: 001MC639 (DISCOVER 100 T)

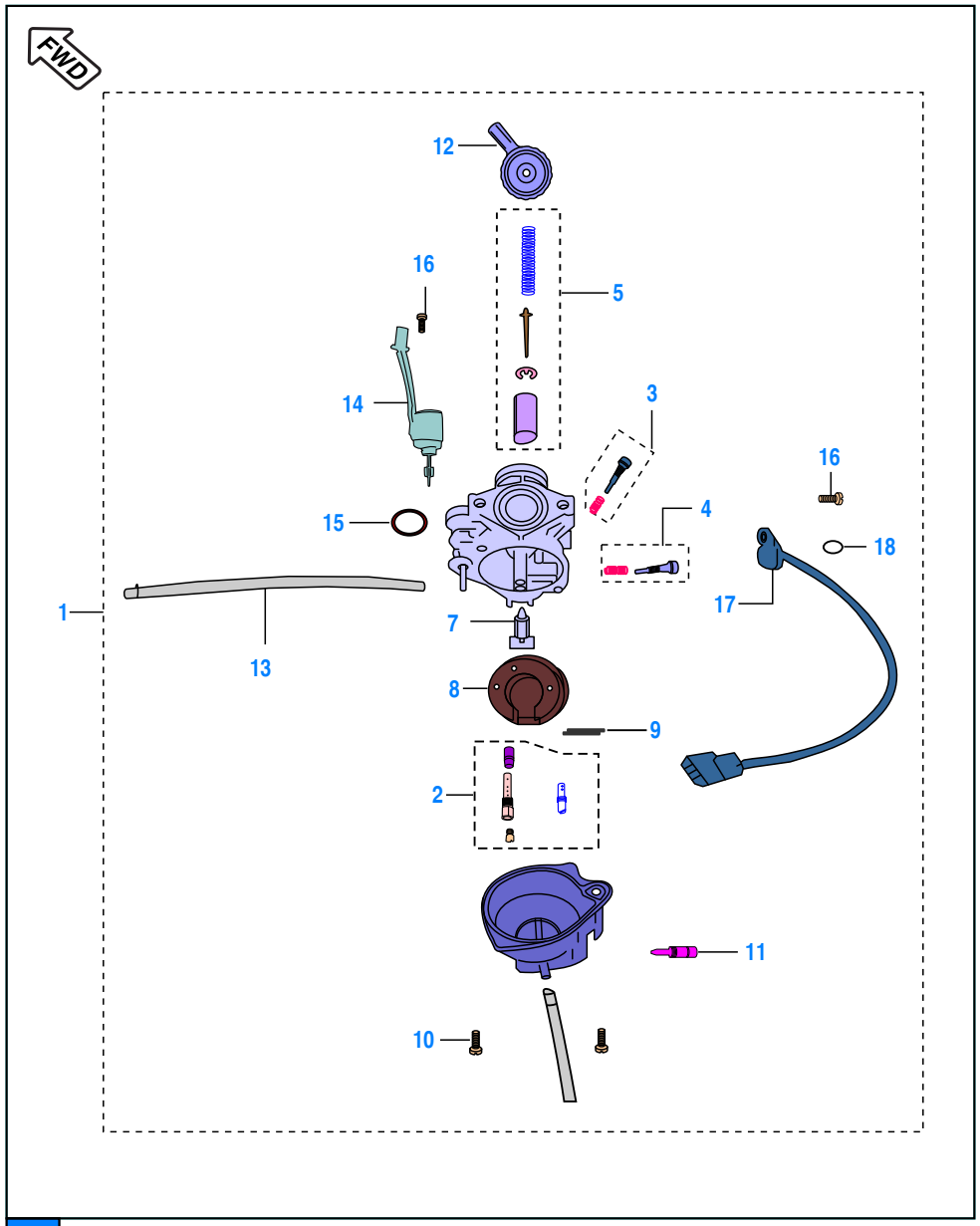

FWD Front Wheel Direction

Plate No.: 18

Carburetor Assembly (100 T)

No.	Part No.	Description	Qty.			Remarks
			125 ST	125 T	100 T	
1	PA 5812 08	Assembly Carburetor	--	--	1	
2	36 PA01 04	Kit Carb Jet D100T	--	--	1	Refer Page No. 125
3	36 PA01 05	Kit Carb Air Screw	--	--	1	Refer Page No. 125
4	36 PA01 06	Kit Carb Idling Screw	--	--	1	Refer Page No. 125
5	36 PA01 07	Kit Carb Throttle Valve	--	--	1	Refer Page No. 125
6	36 PA01 08	Kit O Ring & Gasket	--	--	1	Refer Page No. 125
7	JB 5812 29	Valve Comp Float	--	--	1	
8	JB 5812 30	Float	--	--	1	
9	JB 5812 56	Arm Pin Float	--	--	1	
10	JB 5812 32	Screw Float Chamber	--	--	2	
11	JB 5812 60	Drain Screw	--	--	1	
12	JB 5812 37	Adjuster Cable	--	--	1	
13	JB 5812 58	Tube Air Vent	--	--	1	
14	JB 5812 55	Solenoid Assembly	--	--	1	
15	JB 5812 47	O-Ring Solenoid	--	--	1	
16	JB 5812 48	Screw - Washer	--	--	2	(TPS & Solenoid)
17	JB 5812 02	Sensor Throttle Position	--	--	1	
18	JB 5812 04	O-Ring TPS	--	--	1	

Brand ID: 001MC649 (DISCOVER 125 ST)
Brand ID: 001MC661 (DISCOVER 125 T)
Brand ID: 001MC639 (DISCOVER 100 T)

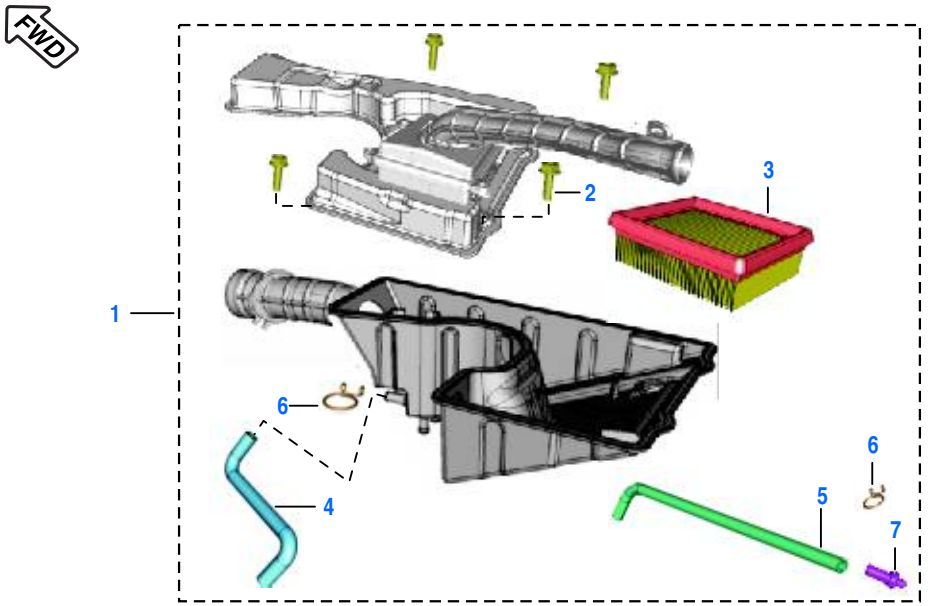

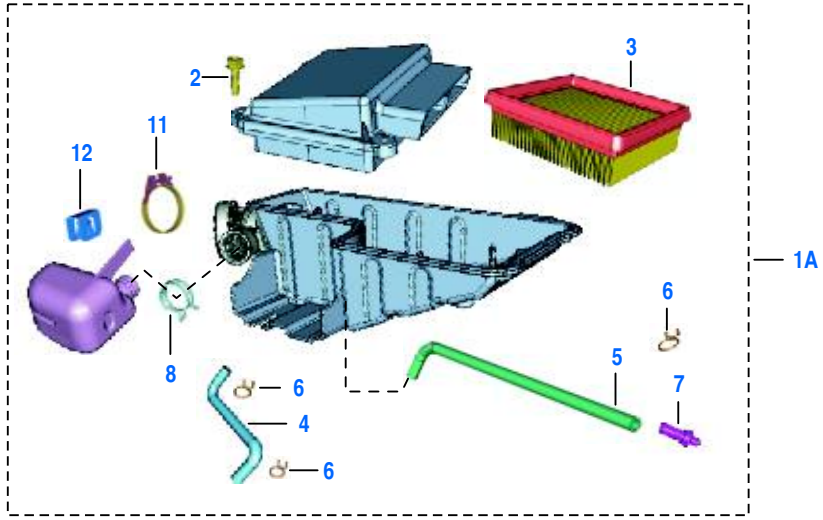

FWD Front Wheel Direction

Plate No.: 19

Air Cleaner Complete

No.	Part No.	Description	Qty.			Remarks
			125 ST	125 T	100 T	
1	JZ 5810 20	Assembly Air Filter	1	--	–	
	JZ 5810 40	Assembly Air Filter	–	1	–	
1A	PA 5810 02	Assembly Air Filter	--	--	1	
2	KA DA06 18	Bolt Flange	4	4	4	
3	JZ 5810 32	Element Air Filter	1	1	1	
4	JZ 5810 26	Hose Breather	1	1	1	
5	JZ 5810 25	Drain Tube	1	1	1	
6	DG 1210 25	Clip	2	2	2	
7	DS 1211 26	Pug	1	1	1	
8	JG 6012 10	Clamp Resonator	--	--	1	
9	39 1949 04	Bolt Flange M6 X 1 X 14L	1	1	1	Air Filter mtg.
10	39 2204 04	Bolt Flange M6 X 1 X 10L	2	2	2	Air Filter mtg.
11	DH 1210 38	Clamp	--	--	1	
12	PA 5810 33	Clip Resonator	--	--	1	

Brand ID: 001MC649 (DISCOVER 125 ST)
Brand ID: 001MC661 (DISCOVER 125 T)
Brand ID: 001MC639 (DISCOVER 100 T)

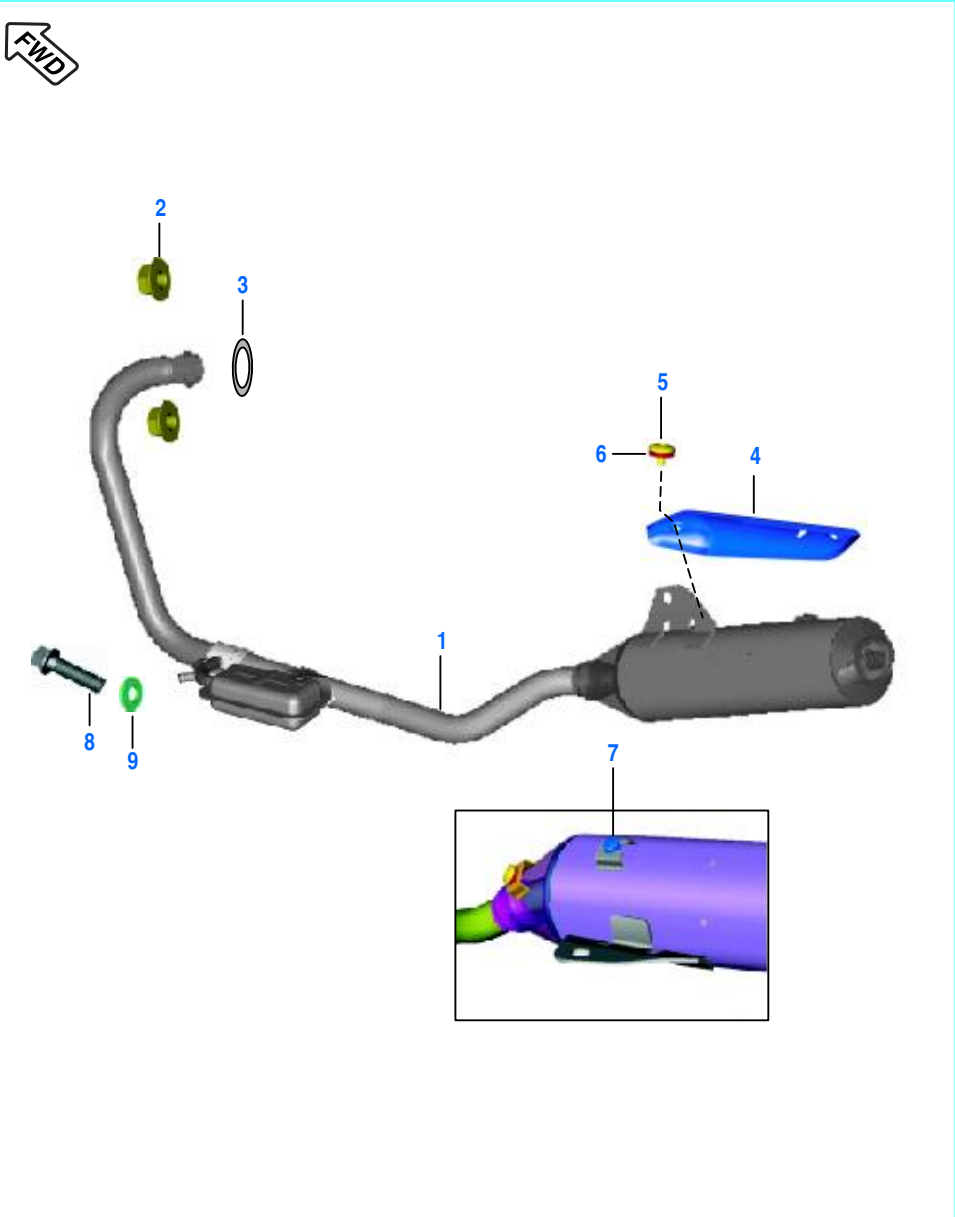

FWD Front Wheel Direction

Plate No.: 20

Silencer Assembly

No.	Part No.	Description	Qty.			Remarks
			125 ST	125 T	100 T	
1	36 JZ00 82	Kit Assly Silencer -125 ST	1	–	--	W/O Shields
	36 PA01 16	Kit Assly Silencer -125 T	–	1	--	W/O Shields
	36 PA00 97	Kit Assly Silencer -100 T	--	--	1	W/O Shields
2	JA 5910 40	Nut - U	2	2	2	
3	JE 5910 02	Gasket Exhaust	1	1	1	
4	JZ 5910 95	Shield Muffler	1	1	1	
5	DH 1013 95	Truss Screw	2	2	2	
6	DH 1013 01	Seal Shield Muffler	2	2	2	
7	JW 5910 30	Grommet Shield	1	1	1	
8	KA DA05 10	Hex Head Bolt	1	1	1	
9	39 2492 11	Plain Washer	1	1	1	

Brand ID: 001MC649 (DISCOVER 125 ST)
Brand ID: 001MC661 (DISCOVER 125 T)
Brand ID: 001MC639 (DISCOVER 100 T)

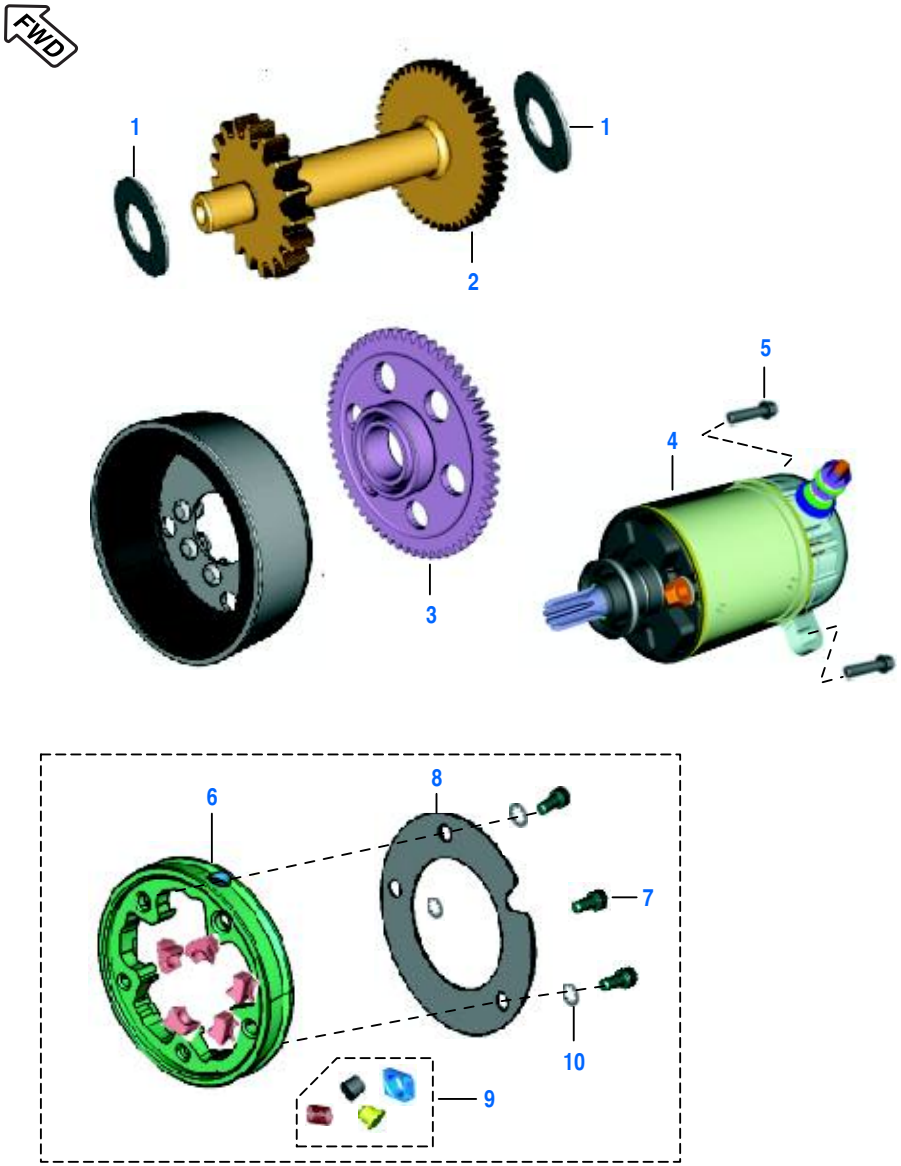

FWD Front Wheel Direction

Plate No.: 21

Starter Assembly

No.	Part No.	Description	Qty.			Remarks
			125 ST	125 T	100 T	
1	JA 6214 02	Washer(Thk 0.4)	2	2	2	
2	JA 6214 06	Drive Assly.	1	1	1	
3	JA 6214 10	Gear Starter Clutch	1	1	1	
4	JA 3516 00	Starter Motor Assly.	1	1	1	
5	LA D000 11	Bolt Flange	2	2	2	
6	JA 6214 14	Body starter Clutch	1	1	1	
7	DH 1013 82	Bolt	3	3	3	
8	DH 1017 81	Plate Roller Clutch	1	1	1	
9	36 JZ00 08	Starter Clutch Repair Kit	1	1	1	Refer Page No.124
10	39 0849 14	Washer	3	3	3	

Brand ID: 001MC649 (DISCOVER 125 ST)
Brand ID: 001MC661 (DISCOVER 125 T)
Brand ID: 001MC639 (DISCOVER 100 T)

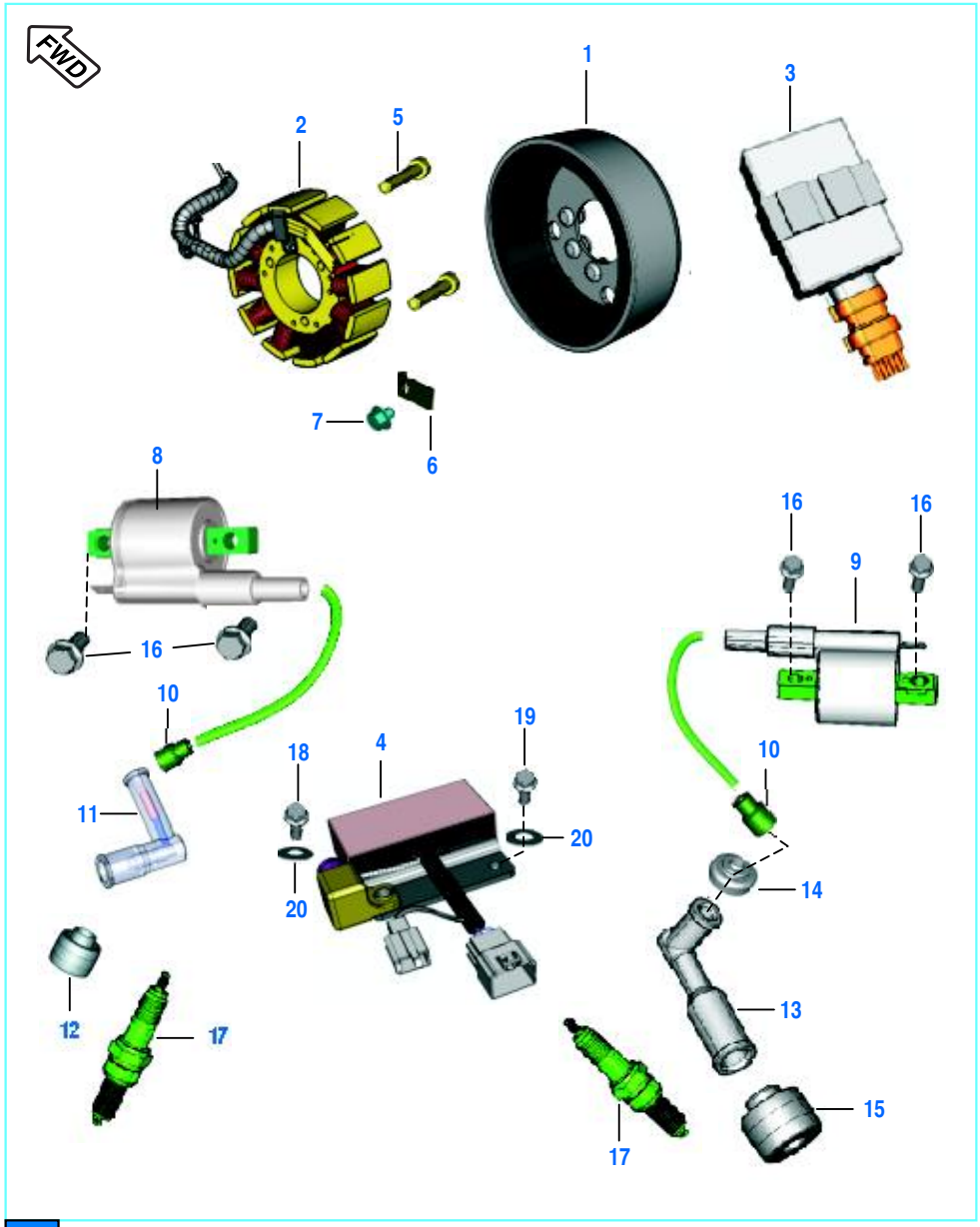

FWD Front Wheel Direction

Plate No.: 22

Magneto, CDI & H.T. Coil

No.	Part No.	Description	Qty.			Remarks
			125 ST	125 T	100 T	
1	JE 3510 02	Rotor Assly	1	1	–	
	JB 3510 14	Rotor Assly	--	--	1	
	PA 3510 01	Rotor Assly	--	--	1	From 13.02.2013
2	JP 3510 07	Stator assly	1	1	–	
	JB 3510 22	Stator assly	--	--	1	
	PA 3510 03	Stator assly	--	--	1	From 13.02.2013
3	JE 3512 06	CDI D125 ST	1	–	–	
	JE 3512 07	CDI D125 T	–	1	–	
	PA 3512 06	CDI D100 T	--	--	1	
4	JZ 4020 00	DC Regulator	1	1	1	
5	39 1675 04	Flange bolt	2	2	2	
	LA C000 52	Bolt	2	2	2	From 13.02.2013
6	JA 5410 28	Lock Plate	1	1	1	
7	DH 1013 80	Pan Head Screw	3	3	3	
8	JZ 3512 11	Coil HT with Cap LH	1	1	1	
9	JZ 3512 13	Coil HT with Cap RH	1	1	1	
10	DD 1110 12	Grommet HT coil	2	2	2	
11	DD 1010 48	Spark Plug Cap	1	1	1	
12	DD 1110 11	Grommet Spark Plug Cap	1	1	1	
13	DH 1110 15	Cap Spark Plug	1	1	1	
14	JD 3512 06	Grommet Sleeve Plug Cap	1	1	1	
15	DH 1110 13	Grommet Spark Plug Cap	1	1	1	
16	59 0400 14	Bolt Flanged M6X1	4	4	4	
17	CF 1110 19	Plug - Spark BOSCH :	2	2	2	UR4AC Or
	DD 1110 18	Plug - Spark Champion	2	2	2	PRZ9HC
18	39 1949 04	Bolt Flange - Small	1	1	1	
19	39 1673 04	Bolt Flange - 14	1	1	1	
20	39 1309 11	Washer Plain	2	2	2	

Brand ID: 001MC649 (DISCOVER 125 ST)
Brand ID: 001MC661 (DISCOVER 125 T)
Brand ID: 001MC639 (DISCOVER 100 T)

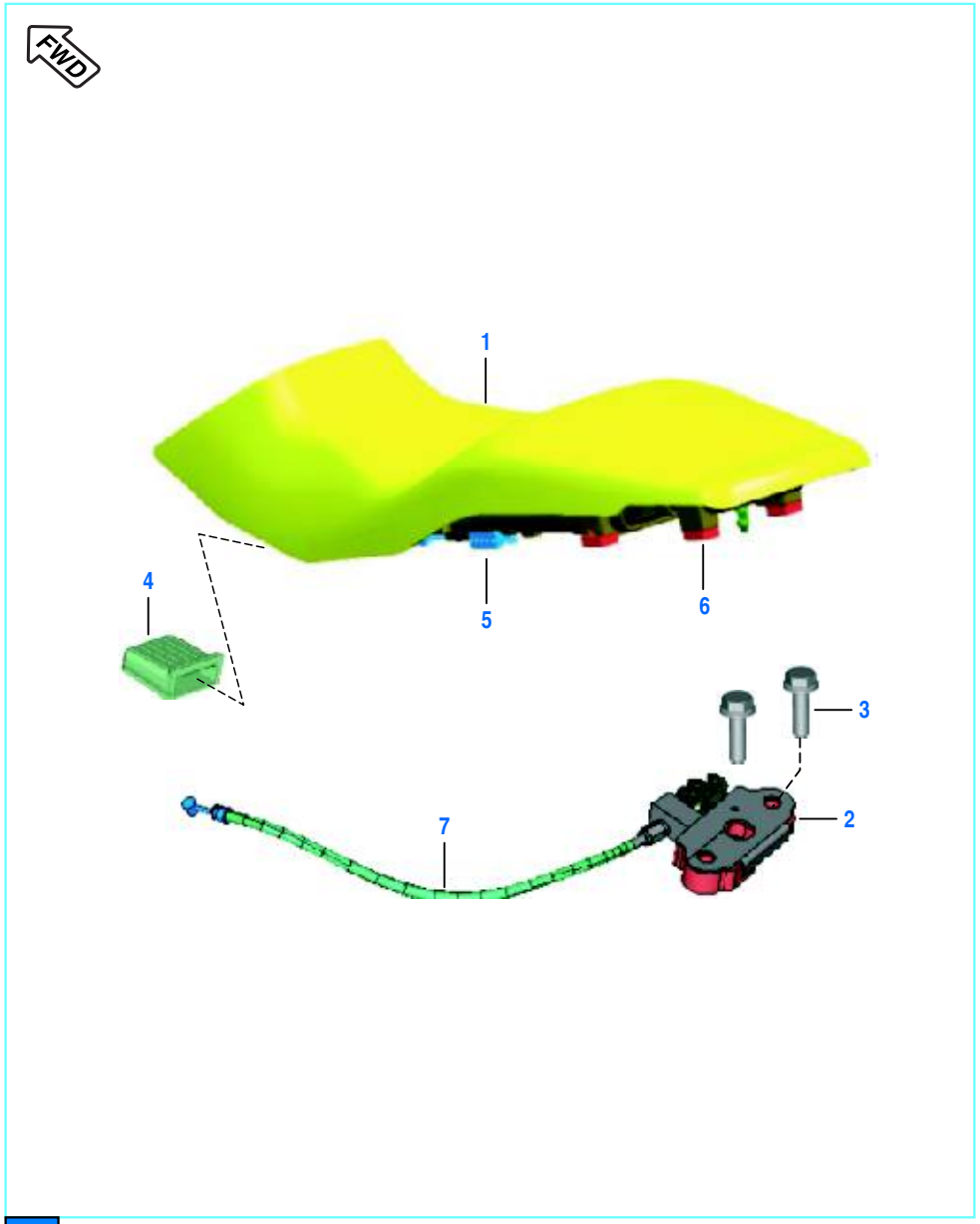

Front Wheel Direction

Plate No.: 23

Seat Assembly / Seat Lock

No.	Part No.	Description	Qty.			Remarks
			125 ST	125 T	100 T	
1	JZ 1910 00	Seat Assly. Comp	1	--	--	
	PA 1910 00	Seat Assly. Comp	--	1	1	
2	DH 1612 33	Lock Assy. Seat	1	1	1	
3	39 1902 04	Bolt - Flanged : M6	2	2	2	
4	DS 2110 07	Damper Front	1	1	1	
5	JZ 1910 10	Damper For Seat	6	6	6	
6	JZ 1910 11	Damper Rear For Seat	4	4	4	
7	JZ 1612 17	Cable Seat Lock	1	--	--	
	PA 1612 05	Cable Seat Lock	--	1	1	

Brand ID: 001MC649 (DISCOVER 125 ST)
Brand ID: 001MC661 (DISCOVER 125 T)
Brand ID: 001MC639 (DISCOVER 100 T)

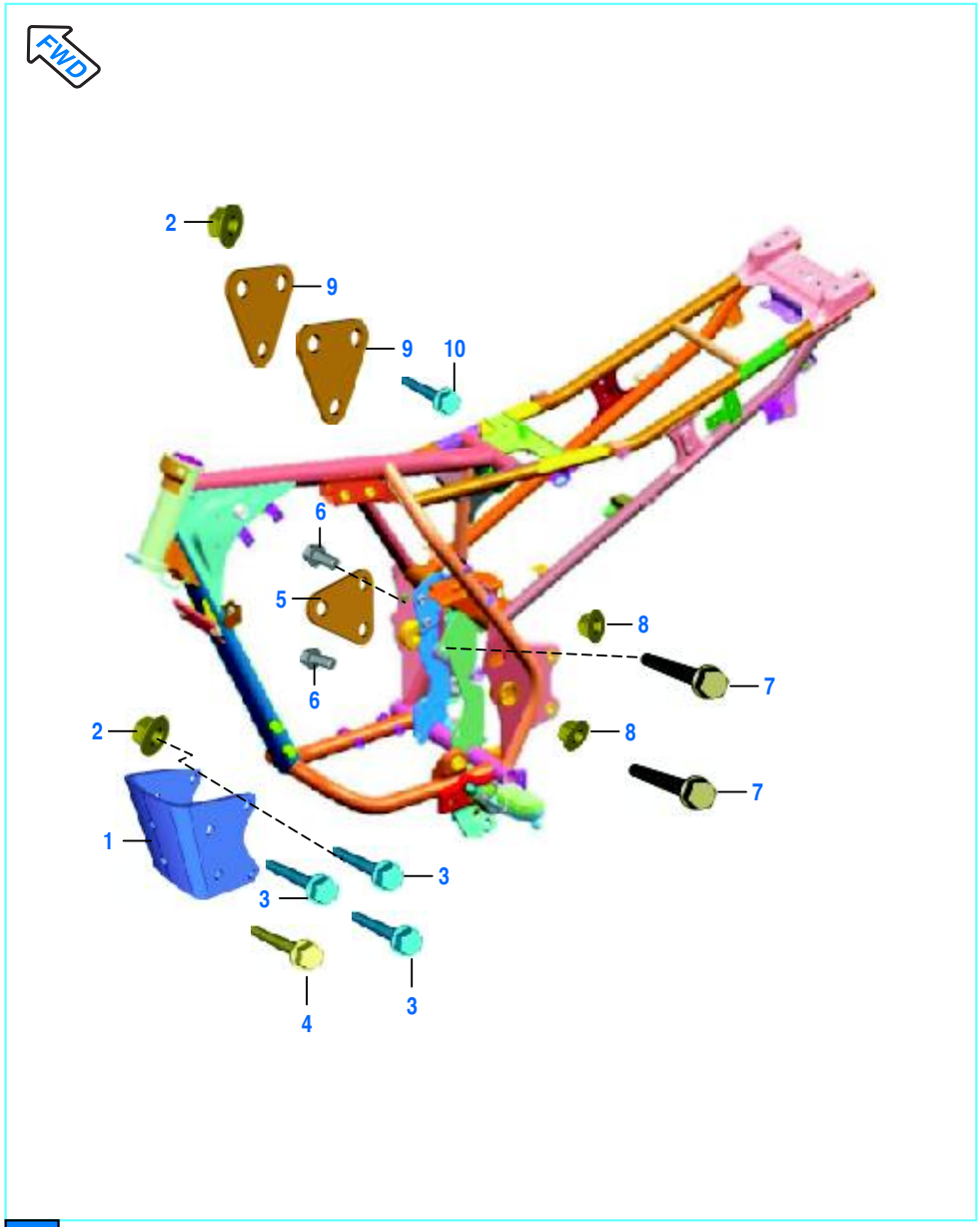

FWD Front Wheel Direction

Plate No.: 24

Engine Mountings

No.	Part No.	Description	Qty.			Remarks
			125 ST	125 T	100 T	
1	JZ 1134 26	Bracket Eng Mtg Front	1	1	1	
2	39 1970 15	Nut - Hex With Flange	4	4	4	
3	JA 1134 04	Bolt Flange M8 L75	3	3	3	
4	39 2498 04	Bolt Flanged	1	1	1	
5	JZ 1134 10	Bracket Eng Mtg Rear Top	1	1	1	
6	39 1940 04	Bolt - Flanged : M8	2	2	2	
7	JA 1134 03	Flanged Bolt M10X110	2	2	2	
8	39 2723 15	Nut Flanged M10 Olive	2	2	2	
9	JZ 1134 11	Bracket Eng Mtg Top	2	--	--	
	PA 1134 02	Bracket Eng Mtg Top LH	--	2	--	
	PA 1134 00	Bracket Eng Mtg Top LH	–	--	2	
10	LA D000 48	Bolt Flanged	3	3	3	M8 X 1.25P X 65 L

Brand ID: 001MC649 (DISCOVER 125 ST)
Brand ID: 001MC661 (DISCOVER 125 T)
Brand ID: 001MC639 (DISCOVER 100 T)

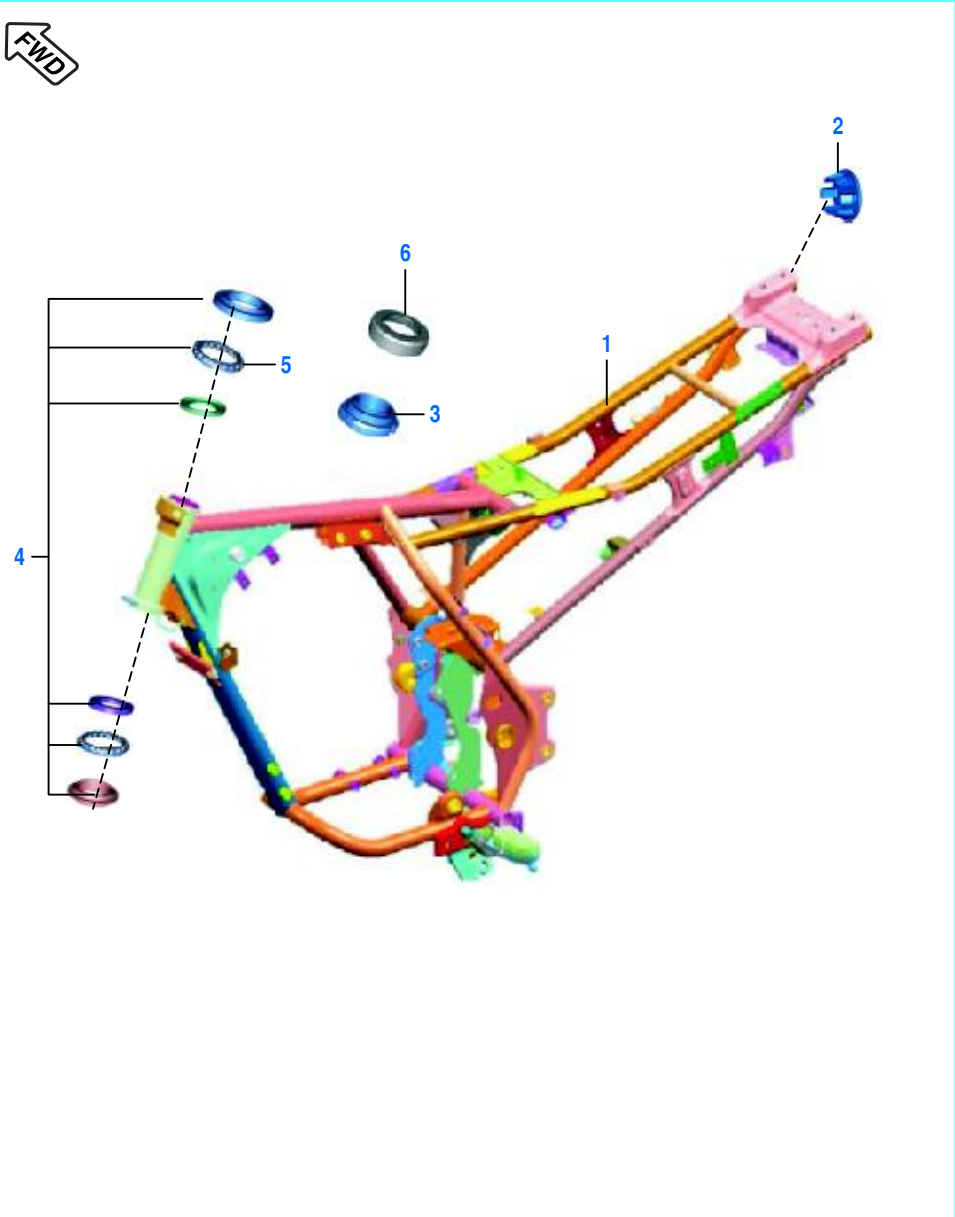

FWD Front Wheel Direction

Plate No.: 25

Frame and Frame Fittings

No.	Part No.	Description	Qty.			Remarks
			125 ST	125 T	100 T	
1	JZ 1110 38	Frame Assembly	1	--	--	
	PA 1110 29	Frame Assembly	–	1	1	
2	JZ 1138 05	Cap For Pipe	2	2	2	
3	JZ 1510 84	Nut Steering	1	1	1	
4	36 JZ00 83	Kit-Brg Race+Cone	1	1	1	Refer Page No. 121
5	DJ 1811 15	Cage Bearing - Steering	2	2	2	
6	JZ 1510 83	Cap Steering	1	1	1	
7	DK 2010 49	Clamp Harness Wiring	1	1	1	N.I.
8	36 0010 52	Grease Lithon RR3-10gm	1	1	1	N.I.

Brand ID: 001MC649 (DISCOVER 125 ST)
Brand ID: 001MC661 (DISCOVER 125 T)
Brand ID: 001MC639 (DISCOVER 100 T)

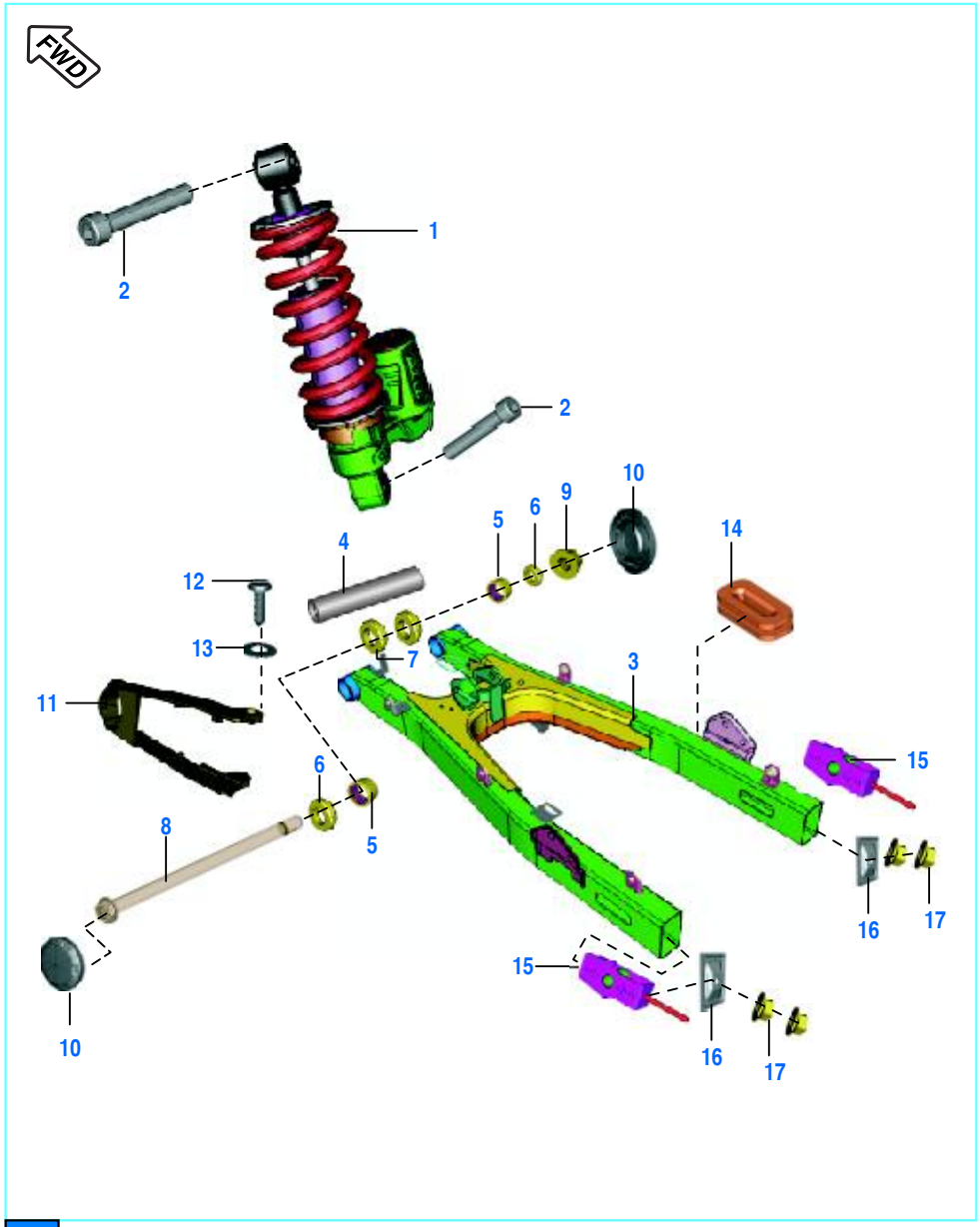

Front Wheel Direction

Plate No.: 26

Swing Arm / Rear Shock Absorber (125 ST)

No.	Part No.	Description	Qty.			Remarks
			125 ST	125 T	100 T	
1	JZ 1220 03	Shock absorber Mono	1	--	--	
2	LA C000 19	Bolt Socket M10x1.25x55	2	--	--	
3	JZ 1220 01	Swing Arm Assy	1	--	--	
4	JZ 1220 10	Spacer Swing Arm	1	--	--	
5	DG 1710 18	Bearing - Needle	2	–	--	
6	DG 1710 19	Seal - Oil	4	--	--	
7	DK 1710 06	Sleeve For Swing Arm	2	--	--	
8	JZ 1220 11	Shaft Swing Arm	1	--	--	
9	DG 1710 17	Nut	1	--	--	
10	JZ 1138 06	Cap For Swing Arm Pivot	2	--	--	
11	JZ 1220 05	Chain Slider	1	--	--	
12	39 0553 02	Screw - Self Tapping	2	--	--	
13	39 0454 11	Washer - Plain	2	--	--	
14	JL 1812 25	Grommet Ii	1	--	--	
15	JZ 1220 08	Adjuster Chain - RH	2	--	--	
16	JZ 1220 12	Plate Chain Adjuster	2	--	--	
17	39 0292 15	Nut - Hexagon : M6 X 1	4	--	–	

Brand ID: 001MC649 (DISCOVER 125 ST)
Brand ID: 001MC661 (DISCOVER 125 T)
Brand ID: 001MC639 (DISCOVER 100 T)

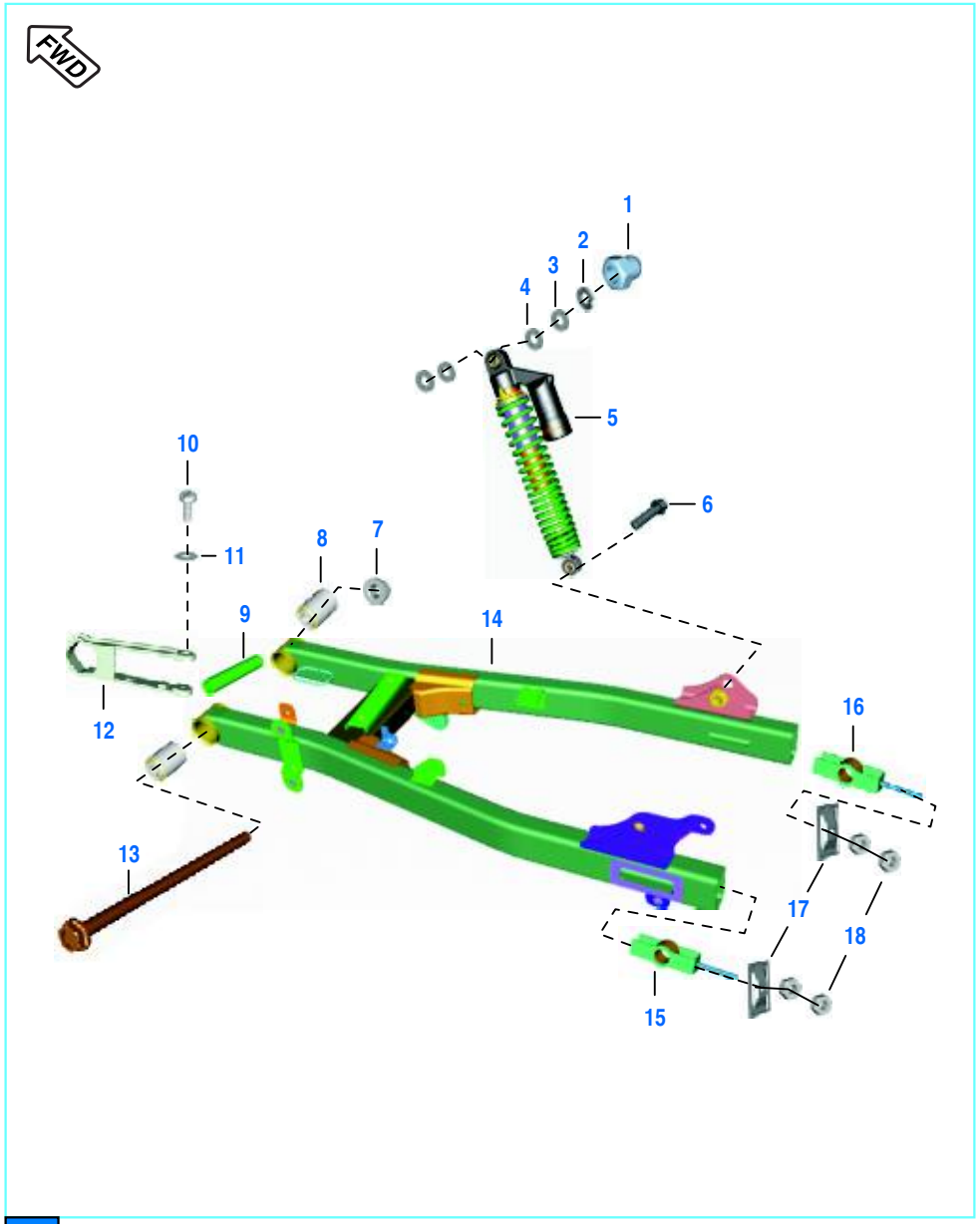

Front Wheel Direction

Plate No.: 27

Swing Arm / Rear Shock Absorber (125 T & 100 T)

No.	Part No.	Description	Qty.			Remarks
			125 ST	125 T	100 T	
1	JB 1220 09	Domed Cap Nut	--	2	2	
2	39 2726 12	Spring Washer	--	2	2	
3	JB 1220 11	Plain Washer	--	2	2	
4	JB 1220 10	Plain Washer	--	4	4	
5	PA 1220 09	Rear Shock Absorber	--	2	2	
6	JB 1220 16	Hex Bolt / Flange - M10	--	2	2	
7	39 1358 15	Flanged Nut	--	1	1	
8	DP 1710 06	Bush	--	2	2	
9	PA 1110 30	Sleeve Swing Arm Pivot	--	1	1	
10	39 0553 02	Screw	--	2	2	
11	39 0454 11	Plain Washer	--	2	2	
12	PA 1220 14	Chain Slider	--	1	1	
13	PA 1220 15	Shaft Swing Arm	--	1	1	
14	PA 1220 13	Swing Arm Assly	–	--	1	
	PA 1220 10	Swing Arm Assly	--	1	–	
15	DJ 1510 36	Adjuster Chain LH	--	1	1	
16	DJ 1510 37	Adjuster Chain RH	--	1	--	
	DX 1510 14	Adjuster Chain RH	–	--	1	
17	DJ 1510 47	Plate Chain Adjuster	--	2	2	
18	39 0292 15	Hexagon Nut	--	4	4	

Brand ID: 001MC649 (DISCOVER 125 ST)
Brand ID: 001MC661 (DISCOVER 125 T)
Brand ID: 001MC639 (DISCOVER 100 T)

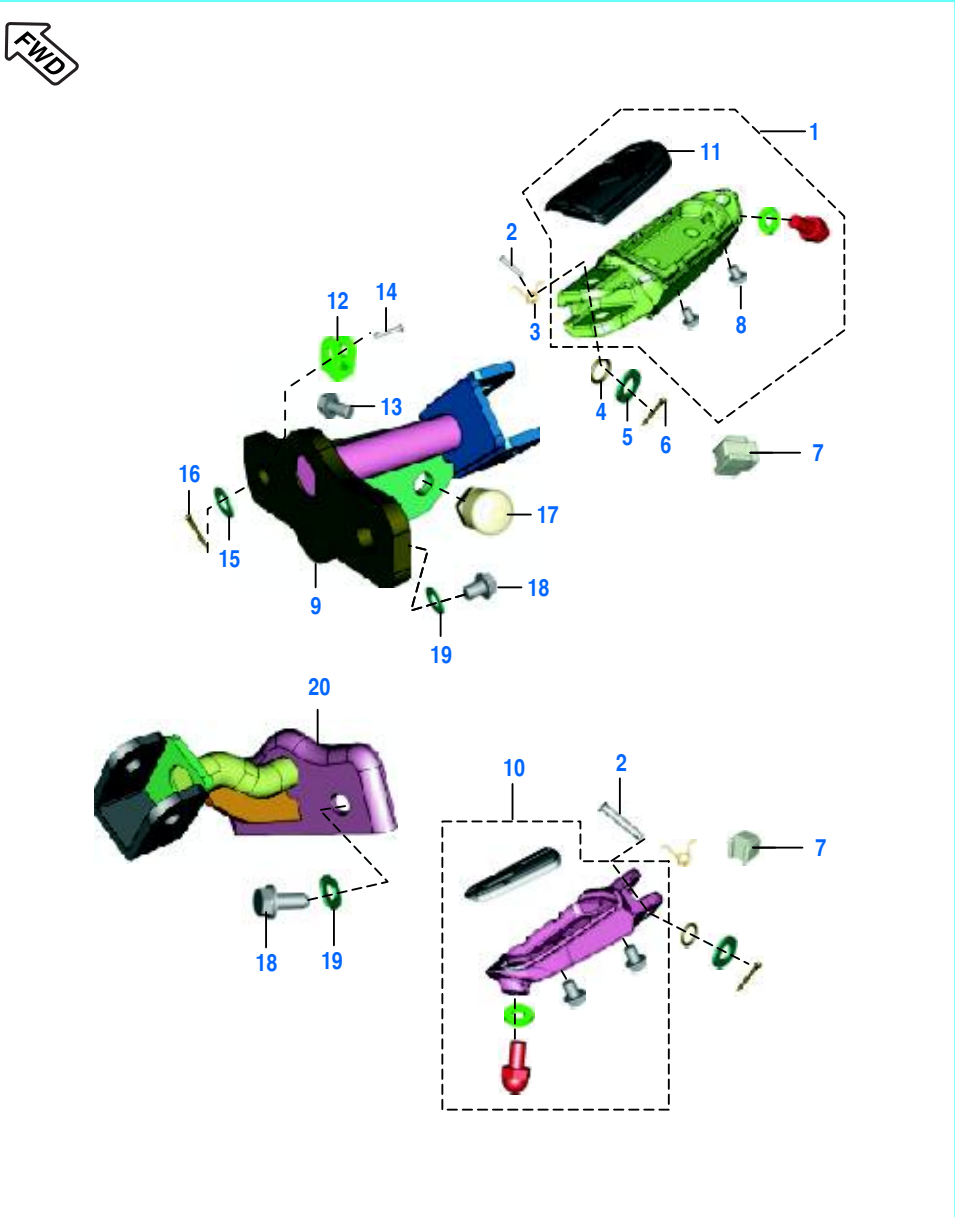

FWD Front Wheel Direction

Plate No.: 28

Rider Foot Rest

No.	Part No.	Description	Qty.			Remarks
			125 ST	125 T	100 T	
1	JZ 1130 28	Assly Main Step RH	1	--	1	
	PA 1130 53	Assly Main Step RH	--	1	--	
2	JZ 1130 36	Pin Main Step	2	2	2	
3	JZ 1130 39	Spring Torsion	2	2	2	
4	30 1410 31	'O' ring	2	2	2	
5	39 1040 11	Washer Plain	2	2	2	
6	39 0784 08	Pin Spit	2	2	2	
7	JL 1130 28	Rubber Pad	2	2	2	
8	39 1791 04	Bolt Flanged M6X8	4	4	4	
9	JZ 1130 21	Stay RH Main Step	1	1	1	
10	JZ 1130 27	Assly Main Step LH	1	--	1	
	PA 1130 51	Assly Main Step LH	--	1	--	
11	JZ 1130 35	Rubber	2	2	2	
12	JZ 1610 24	Damper Brake Lever	1	1	1	
13	39 2671 04	Hexgoan Bolt	1	1	1	
14	30 1910 38	Pin	1	1	1	
15	39 0198 11	Washer	1	1	1	
16	39 0808 08	Split Pin	1	1	1	
17	DH 1611 94	Kick Stopper	1	1	1	
18	39 2310 04	Bolt Flange	4	4	4	
19	39 2659 12	Spring Washer	4	4	4	
20	JZ 1130 20	Stay LH Main Step	1	--	--	
	PA 1130 30	Stay LH Main Step	--	1	1	

Brand ID: 001MC649 (DISCOVER 125 ST)
Brand ID: 001MC661 (DISCOVER 125 T)
Brand ID: 001MC639 (DISCOVER 100 T)

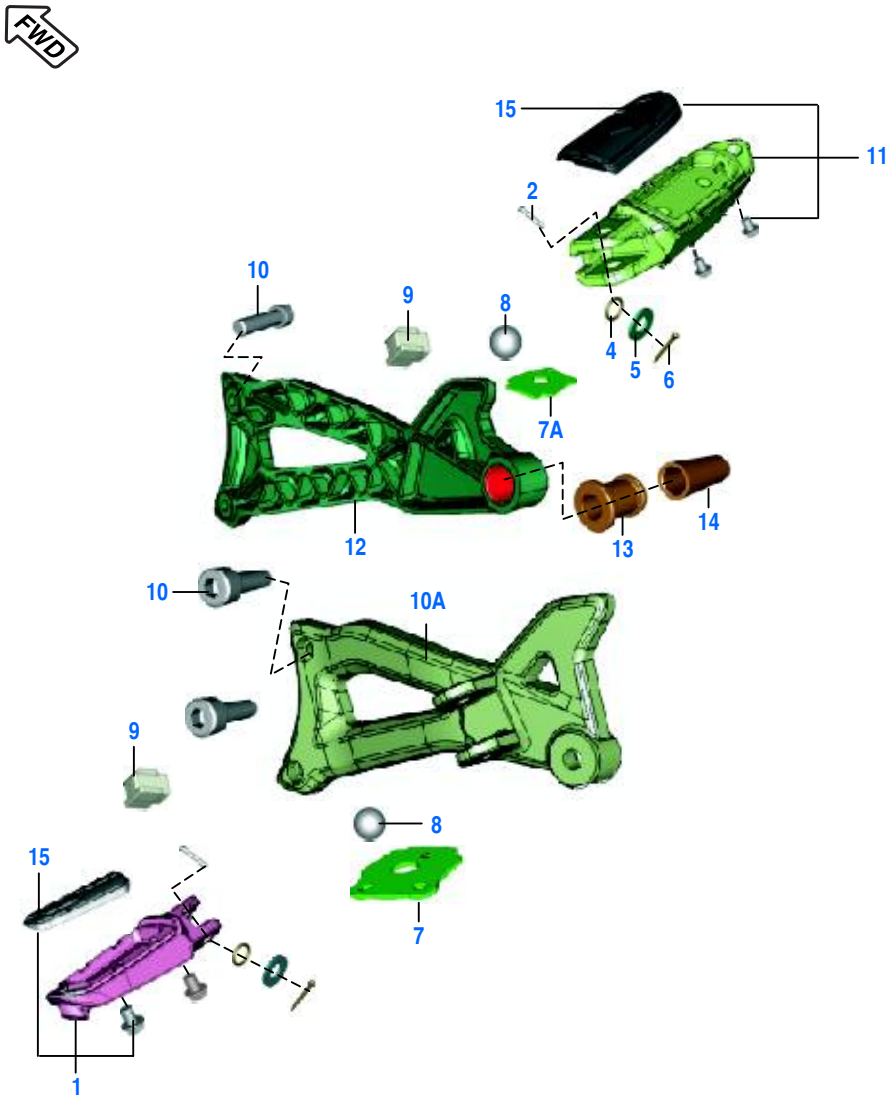

FWD Front Wheel Direction

Plate No.: 29

Pillion Foot Rest / Holder Step

No.	Part No.	Description	Qty.			Remarks
			125 ST	125 T	100 T	
1	JZ 1130 31	Assly Pillion Step LH	1	--	1	
	PA 1130 55	Assly Pillion Step LH	--	1	--	
2	JD 1130 19	Pin Foot Step	2	2	2	
3	GF 1611 43	Spring	2	2	2	N.I.
4	30 1410 31	'O' Ring	2	2	2	
5	39 1040 11	Washer Plain	2	2	2	
6	39 0784 08	Pin Split	2	2	2	
7	PA 1130 42	Plate Lock LH	1	1	1	
7A	PA 1130 43	Plate Lock RH	1	1	1	
8	30 1012 36	Ball	2	2	2	
9	JL 1130 28	Rubber Pad Step LH	2	2	2	
10	LA C000 05	Bolt Socket	4	4	4	
10A	JZ 1130 23	Holder Step LH	1	--	1	
	PA 1130 48	Holder Step LH	--	1	--	
11	JZ 1130 32	Assly Pillion Step RH	1	--	1	
	PA 1130 57	Assly Pillion Step RH	--	1	--	
12	JZ 1130 26	Holder Step RH	1	--	1	
	PA 1130 49	Holder Step RH	--	1	--	
13	JZ 1130 42	Damper Silencer	1	1	1	
14	DH 1611 57	Tube Silencer Mounting	1	1	1	
	DJ 1612 78	Tube Silencer Mounting	1	1	1	with washer
15	JZ 1130 35	Rubber Pillion Footrest RH	2	2	2	
16	36 JL00 15	Kit Hardware	2	2	2	Includes 2,4,5,6

Brand ID: 001MC649 (DISCOVER 125 ST)
Brand ID: 001MC661 (DISCOVER 125 T)
Brand ID: 001MC639 (DISCOVER 100 T)

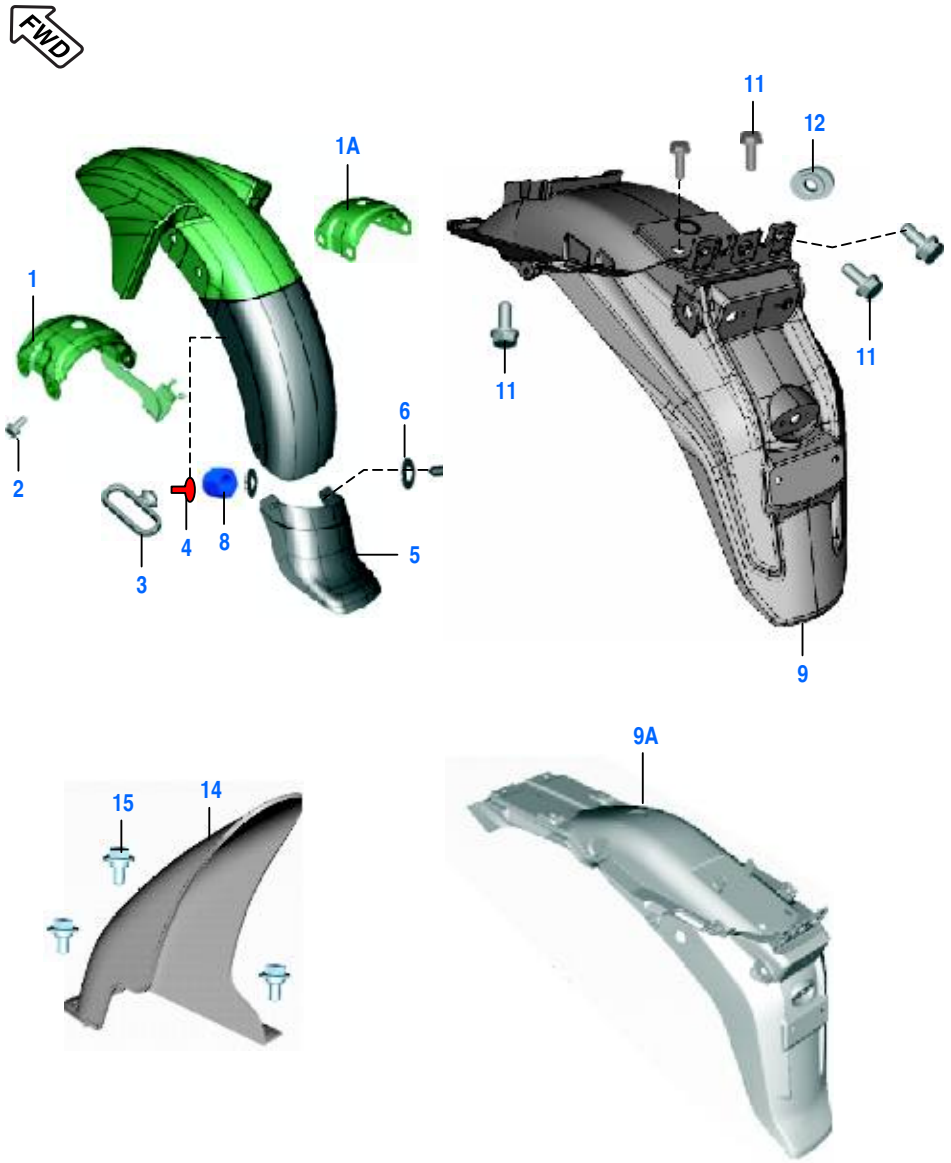

FWD Front Wheel Direction

Plate No.: 30

Mudguard - Front & Rear

No.	Part No.	Description	Qty.			Remarks
			125 ST	125 T	100 T	
1	JZ 1814 15	Fender Brace	1	1	–	Disc Brake
1A	PA 1814 05	Fender Brace	--	1	1	Drum Brake
2	59 0400 19	Bolt Hex With Flange -	4	4	4	M8x1.25
3	DS 1611 25	Guide - Cable	1	1	1	
4	DJ 1610 69	Nail - Cable Guide	1	1	1	
5	JZ 1814 16	Flap Front Fender	1	1	1	
6	39 0242 11	Washer - Plain	6	6	6	
7	39 2420 01	Screw - Pan Head : M5	3	3	3	
8	39 0326 15	Nut - Nyloc :- M5 X 0.8	3	3	3	
9	JZ 1814 19	Fender Rear Rr	1	–	--	
9A	PA 1814 00	Fender Rear Rr	--	1	1	
10	DJ 2011 73	Grommet	3	3	3	
11	LA E000 22	Bolt Flanged	6	6	6	Rear Fender Mtg.
12	DH 1611 58	Grommet	1	1	1	
14	PA 1814 03	Hugger Front	--	1	1	
15	JB 2312 08	Step Bolt	--	1	3	
	DS 1612 24	Bolt Step	2	1	2	

Brand ID: 001MC649 (DISCOVER 125 ST)
Brand ID: 001MC661 (DISCOVER 125 T)
Brand ID: 001MC639 (DISCOVER 100 T)

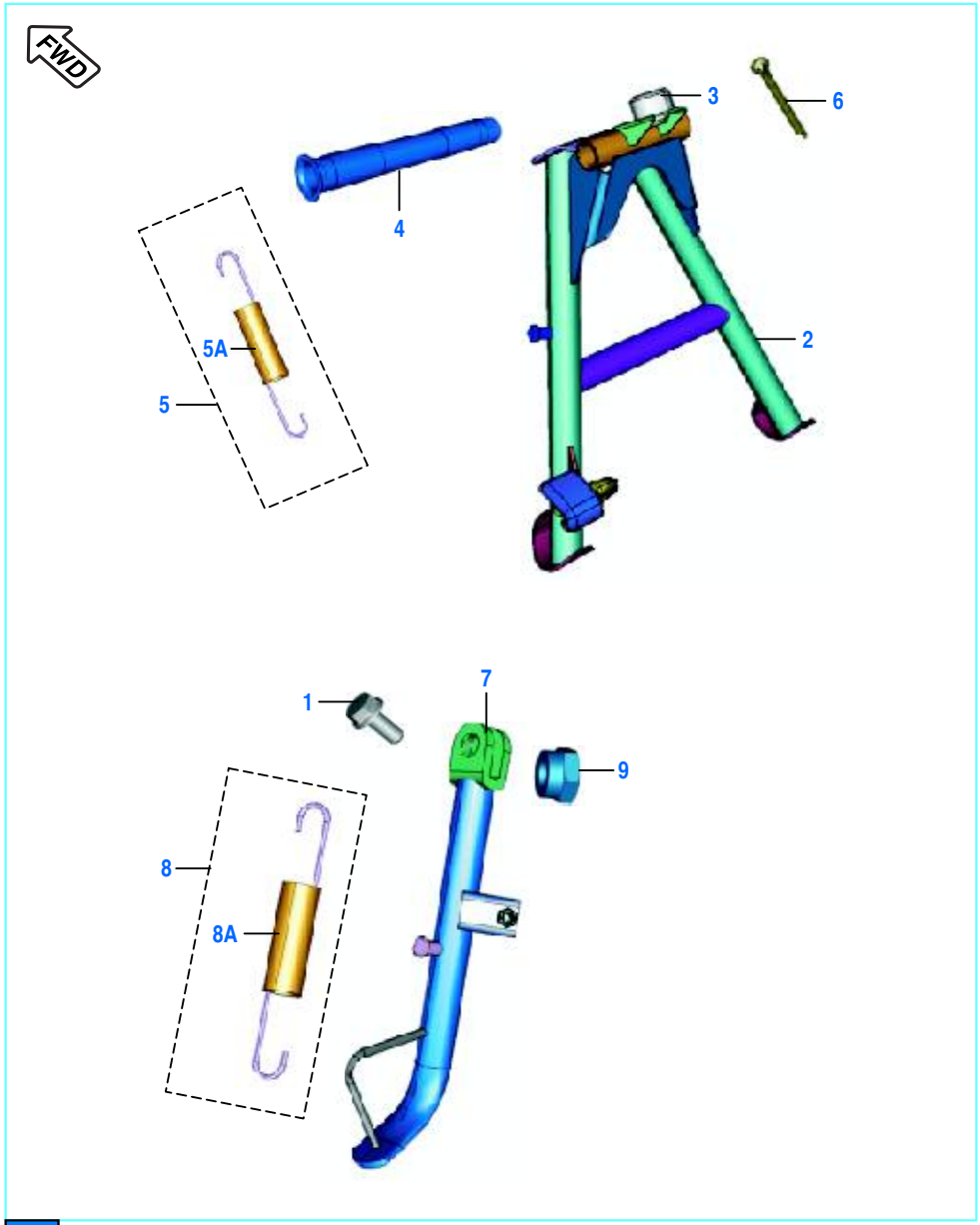

FWD Front Wheel Direction

Plate No.: 31

Stand Assembly

No.	Part No.	Description	Qty.			Remarks
			125 ST	125 T	100 T	
1	DF 1611 02	Bolt For Side Stand Mtg.	1	1	1	
2	JZ 1132 03	Stand Center	1	--	--	
	PA 1132 06	Stand Center	--	1	1	
3	JZ 1132 06	Damper Center Stand	1	--	--	
	PA 1132 04	Damper Center Stand	--	1	1	
4	JZ 1132 07	Shaft Center Stand	1	--	--	B-26-11/02/2013
	JZ 1132 14	Shaft Center Stand	1	1	1	
5	JZ 1132 09	Spring M-Stand With Cover	1	1	1	
5A	JZ 1132 12	Cover Spring	1	1	1	
6	39 0797 08	Pin - Cotter	1	1	1	
7	JZ 1132 04	Stand Side	1	1	1	
8	JZ 1132 10	Spring S-Stand With Cover	1	1	1	
8A	JZ 1132 11	Cover Spring Side Stand	1	1	1	
9	39 0422 15	Nut - Nyloc :- M10	1	1	1	

Brand ID: 001MC649 (DISCOVER 125 ST)
Brand ID: 001MC661 (DISCOVER 125 T)
Brand ID: 001MC639 (DISCOVER 100 T)

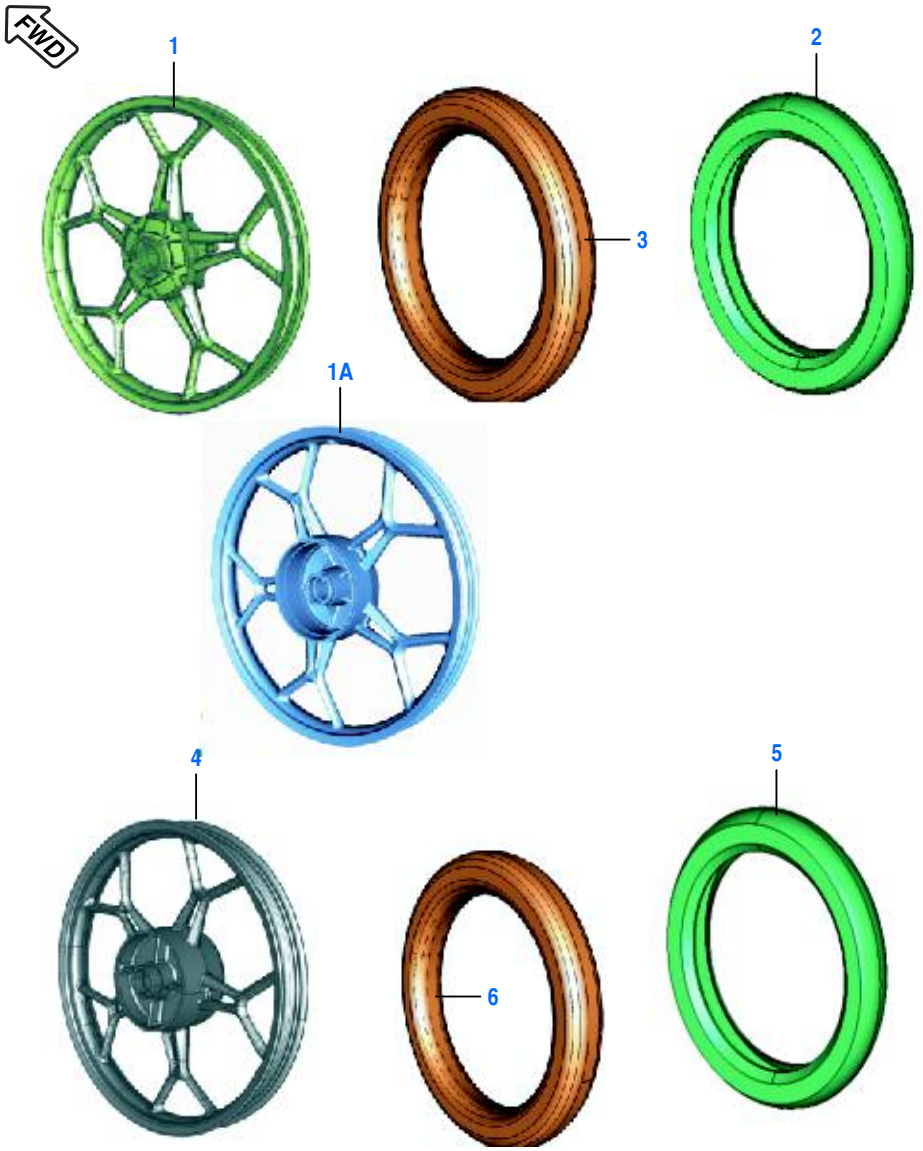

FWD Front Wheel Direction

Plate No.: 32

Tube / Tyre / Rim

No.	Part No.	Description	Qty.			Remarks
			125 ST	125 T	100 T	
1	JZ 1310 28	Wheel Front 1.4X17	1	1	--	Disc Brake
1A	JZ 1310 26	Wheel Front 1.4X17	--	1	1	Drum Brake
2	DS 1510 48	Tyre 2.75 X 17	1	--	--	Not Serviceable in Spare
	DM 1510 25	Tyre 2.75 X 17	--	1	1	Not Serviceable in Spare
3	DS 1510 49	Tube - 2.75 X 17	1	1	1	Not Serviceable in Spare
4	JZ 1312 24	Wheel Rear 1.6X17	1	--	--	
	PA 1312 15	Wheel Rear 1.6X17	--	1	1	
5	DS 1510 52	Tyre 3.00 X 17	1	--	--	Not Serviceable in Spare
	DM 1510 28	Tyre 3.00 X 17	--	1	1	Not Serviceable in Spare
6	DS 1510 53	Tube - 3 X 17	1	1	1	Not Serviceable in Spare

Brand ID: 001MC649 (DISCOVER 125 ST)
Brand ID: 001MC661 (DISCOVER 125 T)
Brand ID: 001MC639 (DISCOVER 100 T)

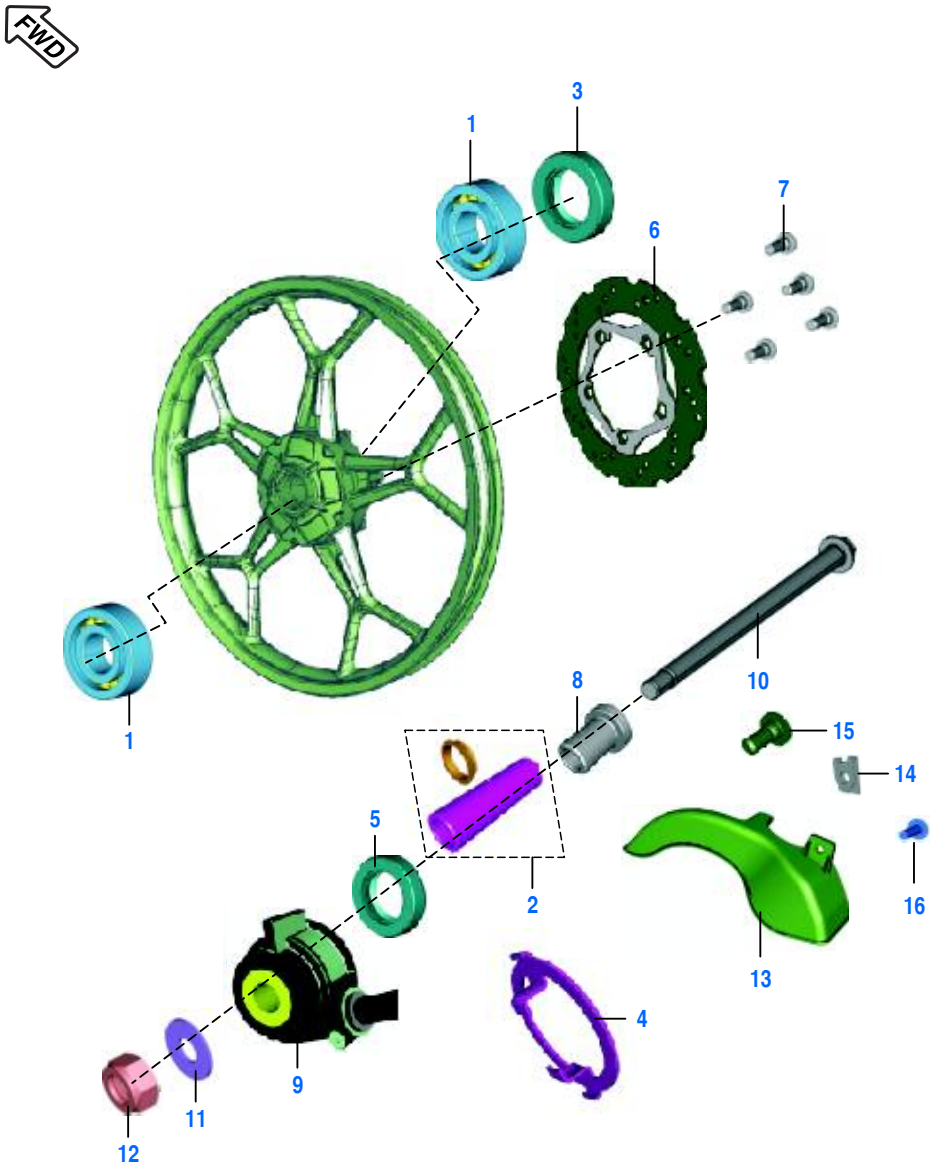

FWD Front Wheel Direction

Plate No.: 33

Front Hub (Disc brake)

No.	Part No.	Description	Qty.			Remarks
			125 ST	125 T	100 T	
1	39 2688 20	Bearing - Ball 6301 RS1/C3	2	2	--	(12X37X12)
2	DE 1510 06	Spacer Assembly	1	1	–	
3	30 1510 33	Seal - Oil	1	1	--	
4	DE 1510 12	Plate - Drive For	1	1	--	Speedometer Gear
5	DE 1510 08	Seal - Oil	1	1	--	
6	JZ 1318 18	Disc Brake - 200 Mm	1	1	--	
7	LA C000 02	Socket Head Bolt M-6, 10.9	5	5	–	
8	JN 1310 03	Spacer	1	1	--	
9	JZ 1316 01	Case Meter Assy - Gear	1	1	--	
10	JB 1310 17	Axle Front	1	1	--	
11	JB 1310 18	Plain Washer	1	1	--	
12	59 1500 03	U Nut M12	1	1	--	
13	JW 1812 41	Cover Disc	1	1	--	
14	JN 1812 11	Clip Nut - M6	1	1	--	Disc Cover Mtg.
15	LB U000 04	Step Bolt - M5x12L- 4.8	1	1	--	Disc Cover Mtg.
16	LB U000 05	Screw Truss- M6x35 L,4.8	1	1	--	Disc Cover Mtg.

Brand ID: 001MC649 (DISCOVER 125 ST)
Brand ID: 001MC661 (DISCOVER 125 T)
Brand ID: 001MC639 (DISCOVER 100 T)

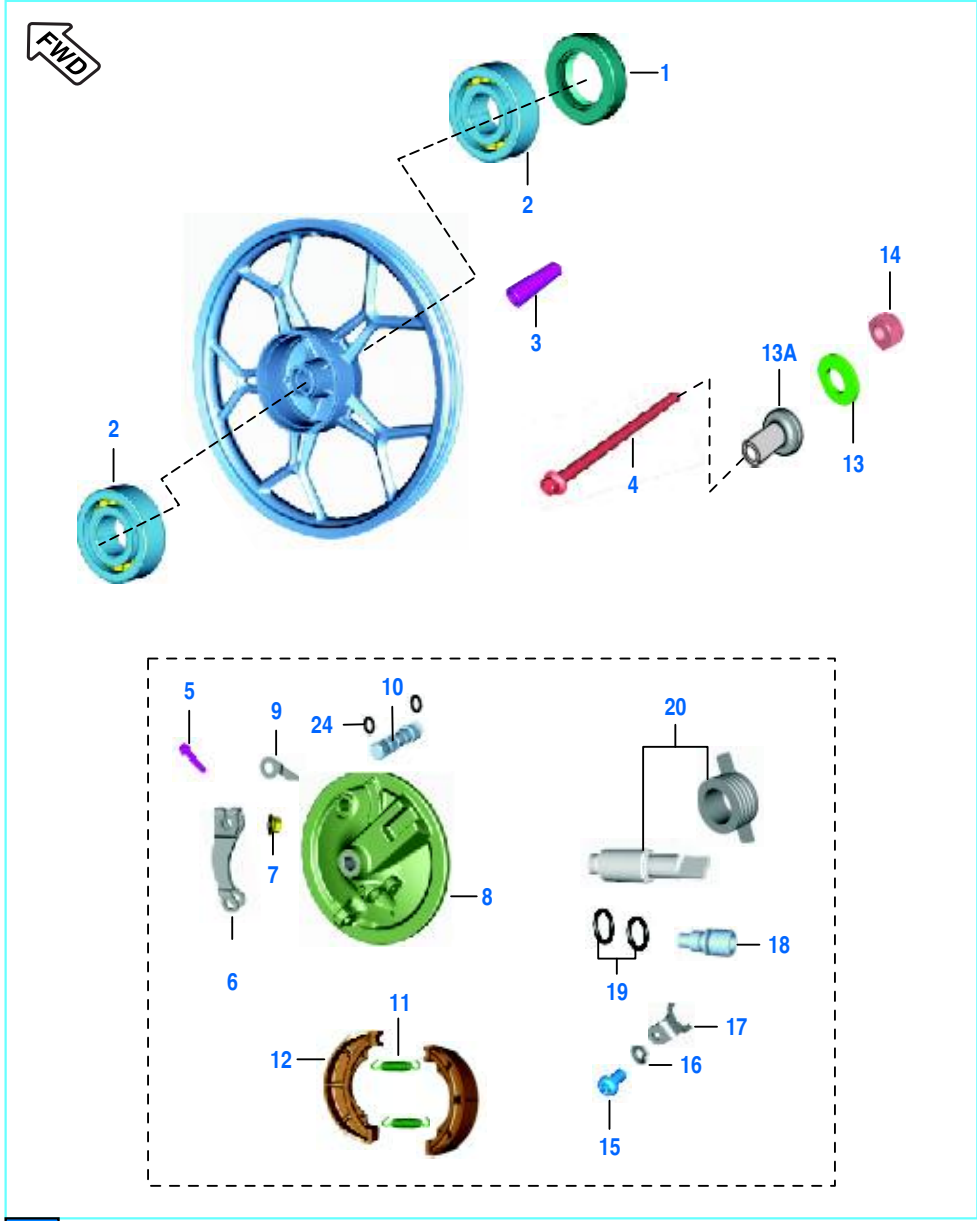

FWD Front Wheel Direction

Plate No.: 34

Front Hub (Drum Brake)

No.	Part No.	Description	Qty.			Remarks
			125 ST	125 T	100 T	
1	30 1510 33	Oil Seal	--	1	1	
2	39 2688 20	Bearing Ball	--	1	1	
3	30 1510 32	Collar Bearing	--	1	1	
4	JB 1310 17	Axle Front Wheel	--	1	1	
5	DS 1510 95	Bolt	--	1	1	
6	DS 1510 92	Lever Brake Cam	--	1	1	
7	DS 1510 94	Nut	--	1	1	
8	DS 1510 87	Panel Assly Front Brake	--	1	1	
9	DS 1510 91	Indicator	--	1	1	
10	DS 1510 89	Cam Brake Assly.	--	1	1	
11	30 1510 69	Spring	–	2	2	
12	30 1511 05	Shoe Brake	–	2	2	
13	JB 1310 18	Plain Washer	--	1	1	
13A	JB 1310 22	Spacer + Dust Seal	--	1	1	
14	59 1500 03	U Nut (M12)	--	1	1	
15	39 0840 01	Pan Headed Screw	--	1	1	
16	39 0900 12	Washer Spring	--	1	1	
17	30 1511 18	Stopper for Bushing	--	1	1	
18	JA 1316 06	Bushing Speedo Gear	--	1	1	
19	39 1013 21	'O' Ring	--	2	2	Speedo Cable
20	36 DS 15 02	Speedometer Gear Kit	--	1	1	
21	30 1510 35	Seal Oil	--	1	1	N.I.
22	30 1510 42	Washer Plain	--	2	2	Gear Meter Screw
23	LB D000 01	Screw	–	1	1	To Secure
24	30 1510 38	Ring 'O'	--	2	2	

Brand ID: 001MC649 (DISCOVER 125 ST)
Brand ID: 001MC661 (DISCOVER 125 T)
Brand ID: 001MC639 (DISCOVER 100 T)

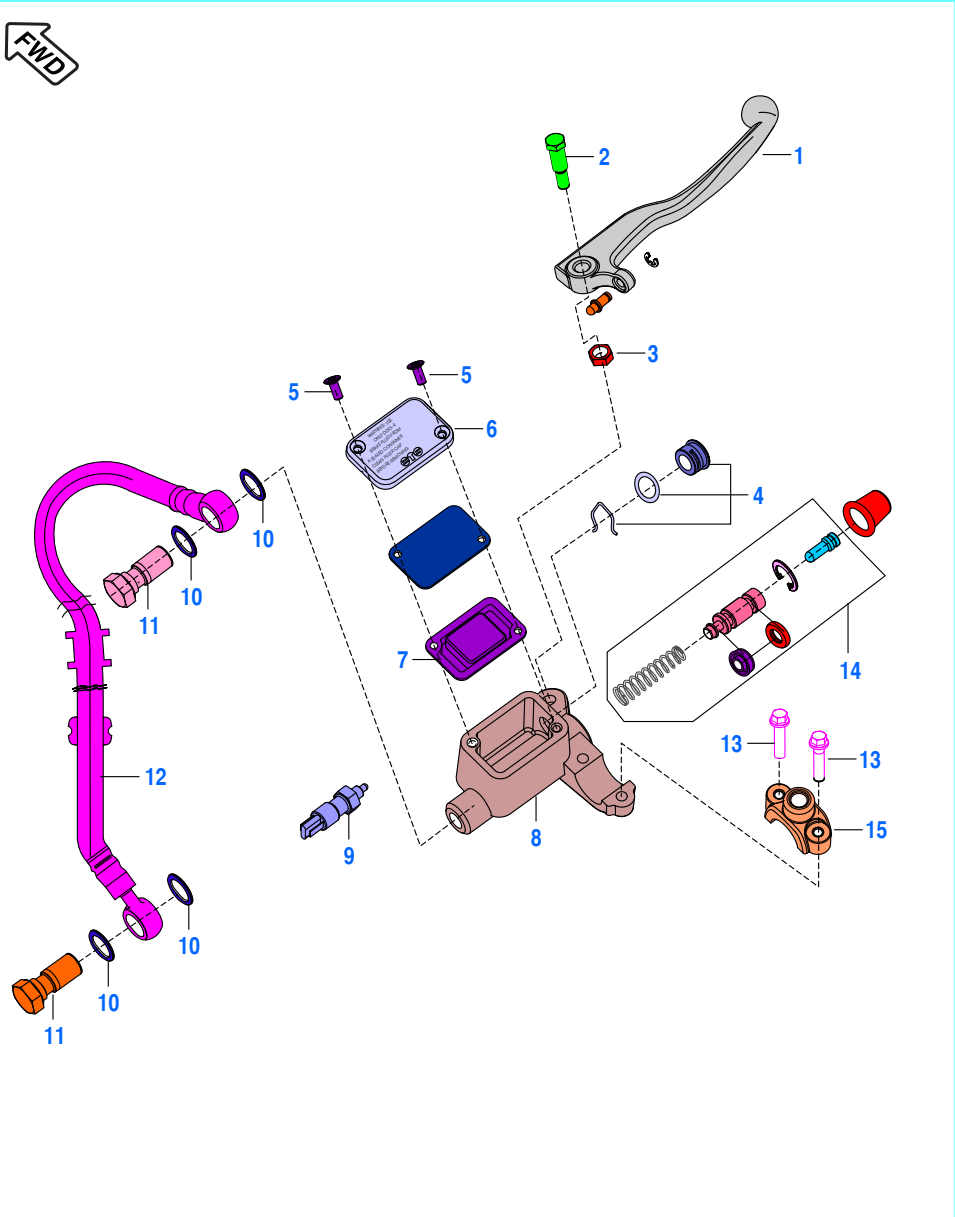

FWD Front Wheel Direction

Plate No.: 35

Front Master Cylinder (Disc brake)

No.	Part No.	Description	Qty.			Remarks
			125 ST	125 T	100 T	
1	DJ 1910 06	Lever Front Brake	1	1	--	
2	DE 1910 31	Bolt Front Bracket I	1	1	–	
3	DE 1910 32	Nut	1	1	--	
4	DE 1910 35	Oil Window Kit	1	1	--	
5	DJ 1910 30	Screw	2	2	--	
6	DE 1910 29	Cover - Reservoir	1	1	--	
7	DE 1910 28	Diaphragm	1	1		
8	DJ 1910 58	Master Cylinder with lever	1	1	--	
9	DE 2010 16	Switch	1	1	--	
10	DE 1910 10	Washer - Copper	4	4	--	
11	DE 1910 11	Bolt - Banjo	2	2	--	
12	JW 1318 05	Hose Assembly	1	1	--	
13	LA D000 37	Bolt Flanged M8X1X50	2	2	--	
14	36 DJ40 31	Major Kit Major Master Cyl	1	1	--	
15	DE 1910 33	Clamp - Holder : RH	1	1	–	

Brand ID: 001MC649 (DISCOVER 125 ST)
Brand ID: 001MC661 (DISCOVER 125 T)
Brand ID: 001MC639 (DISCOVER 100 T)

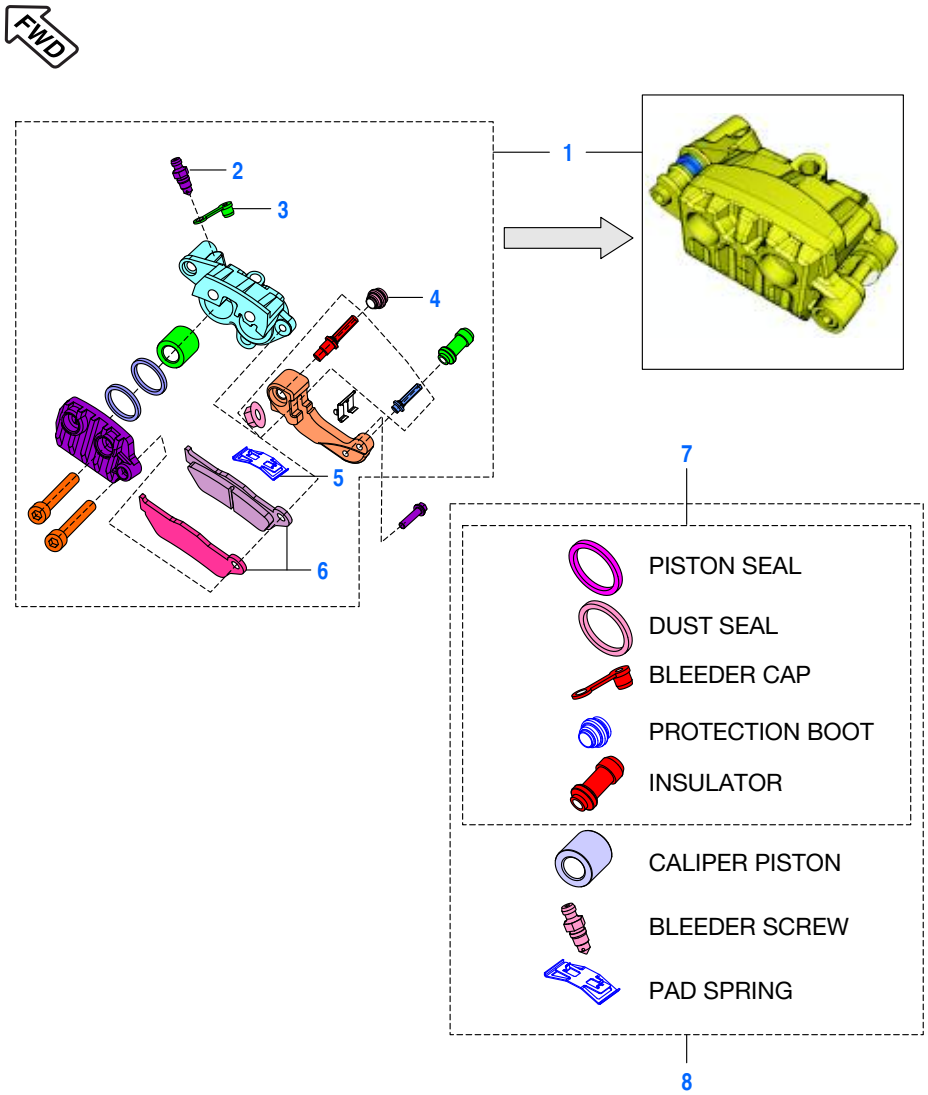

FWD Front Wheel Direction

Plate No.: 36

Front Disc Brake (Disc brake)

No.	Part No.	Description	Qty.			Remarks
			125 ST	125 T	100 T	
1	JW 1318 01	Caliper Assy Brake Front	1	1	--	
2	DE 1510 46	Screw Bleeder	1	1	--	
3	DE 1510 47	Bleeder Cap	1	1	--	
4	JL 1318 07	Boot	1	1	--	
5	DE 1510 48	Spring	1	1	–	
6	JW 1318 07	Pad	1	1	--	
7	36 DJ40 32	Minor Kit	1	1	--	
8	36 DJ40 33	Major Kit	1	1	–	

Brand ID: 001MC649 (DISCOVER 125 ST)
Brand ID: 001MC661 (DISCOVER 125 T)
Brand ID: 001MC639 (DISCOVER 100 T)

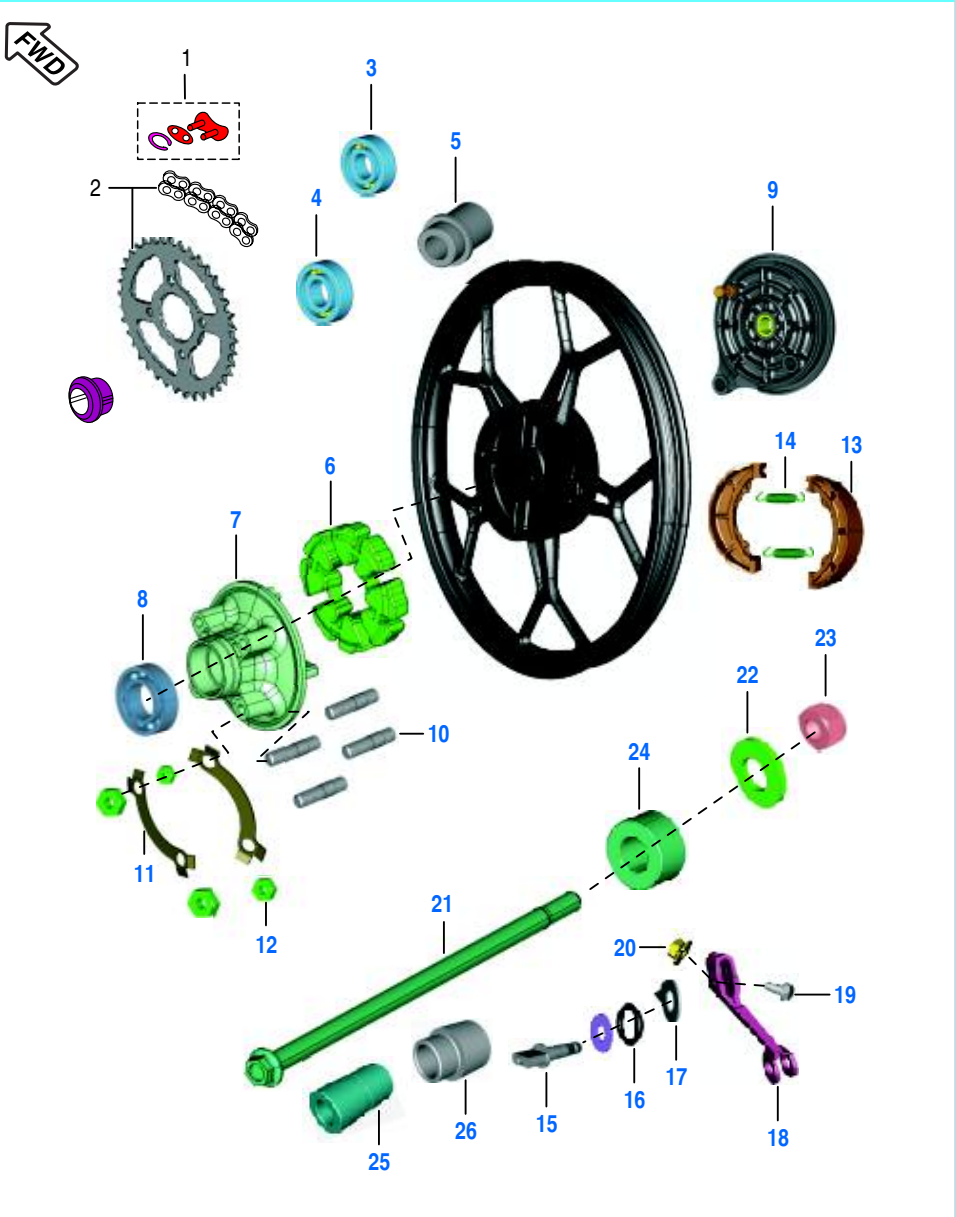

FWD Front Wheel Direction

Plate No.: 37

Rear Hub (125 ST)

No.	Part No.	Description	Qty.			Remarks
			125 ST	125 T	100 T	
1	JD 1410 03	Drive Chain Lock	1	--	--	
2	36 JZ00 80	Kit Chain Sprocket	1	--	--	Refer Page No.121
3	39 2686 20	Bearing-Ball	1	--	--	
4	39 2687 20	Bearing-Ball	1	--	--	
5	30 1510 75	Collar-Bearing	1	--	--	
6	DK 1510 94	Coupling Rubber	1	--	--	
7	JN 1312 03	Coupling	1	--	--	
8	39 2240 20	Ball Bearing	1	--	--	
9	JZ 1318 13	Panel Rear Brake	1	--	--	
10	DS 1510 73	Stud	4	--	--	
11	PF 1312 20	Washer Lock	2	--	--	
12	LC B000 05	Nut Hex A/F	4	--	--	
13	30 1511 05	Shoe Brake	2	--	--	
14	30 1510 69	Spring	2	--	--	
15	30 1510 11	Cam Brake	1	--	--	
16	30 1510 38	'O' Ring	1	--	--	
17	DS 1510 90	Indicator	1	--	--	
18	JZ 1318 03	Lever Cam Brake	1	--	--	
19	JB 1312 24	Hex Bolt with Flange	1	--	--	
20	DS 1510 94	Flange Nut	1	--	--	
21	JZ 1312 17	Axle Rear	1	--	--	
22	LD B000 01	Washer Plain	2	--	--	
23	DH 1710 19	Nut - U :- Swing Arm	1	--	--	
24	JD 1312 10	Collar Assy	1	--	--	
25	DX 1510 22	Collar	1	--	--	
26	JD 1312 12	Sleeve	1	--	--	

Brand ID: 001MC649 (DISCOVER 125 ST)
Brand ID: 001MC661 (DISCOVER 125 T)
Brand ID: 001MC639 (DISCOVER 100 T)

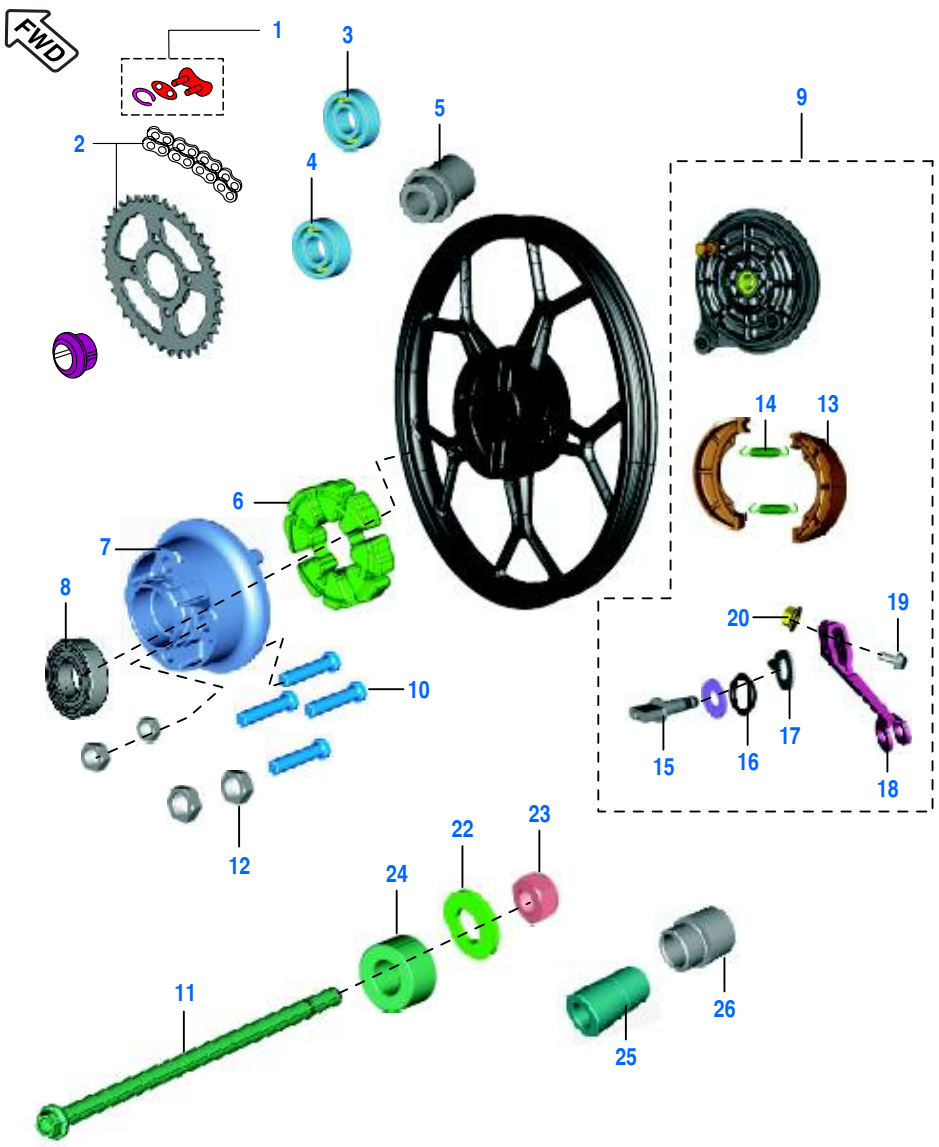

Front Wheel Direction

Plate No.: 38

Rear Hub (125 T & 100 T)

No.	Part No.	Description	Qty. 125 ST	Qty. 125 T	Qty. 100 T	Remarks
1	JD 1410 03	Drive Chain Lock	--	1	1	
2	36 PA00 95	Kit Chain Sprocket	–	--	1	Refer Page No.123
	36 PA01 13	Kit Chain Sprocket	--	1	–	Refer Page No.126
3	39 2688 20	Bearing-Ball C3	--	1	1	
4	KP BB62 01	Bearing-Ball C3	--	1	1	
5	30 1510 75	Collar-Bearing	--	1	1	
6	PA 1312 63	Coupling Rubber	--	–	1	
	DK 1510 94	Coupling Rubber	--	1	--	
7	PA 1312 08	Coupling	--	--	1	
	DS 1510 68	Coupling	--	1	--	
8	39 2240 20	Ball Bearing	--	1	1	
9	PA 1318 31	Panel Rear Brake	--	1	1	
10	PA 1312 61	D Bolt	--	4	4	
11	PA 1312 23	Axle Rear	–	--	1	
	PA 1312 24	Axle Rear	--	1	--	
12	LC L000 03	Nut U Flange	--	4	4	
13	31 1510 07	Shoe Brake	--	2	2	
14	30 1510 69	Spring	--	2	2	
15	JB 1312 23	Cam Brake Assly.	--	1	1	
16	30 1510 38	'O' Ring	--	1	1	
17	30 1510 05	Wear Indicator	--	1	1	
18	PA 1318 09	Lever Cam Brake	--	1	1	
19	JB 1312 24	Hex Bolt with Flange	--	1	1	
20	DS 1510 94	Flange Nut	--	1	1	
21	JB 1312 25	Hex Nut M18	--	1	1	N.I.
22	LD B000 30	Washer Plain	–	--	1	
	LD B000 28	Washer Rear Axle RH	--	1	--	
23	59 1500 03	Nut - U M12	--	--	1	
	DJ 1710 33	Nut - U M12	--	1	–	

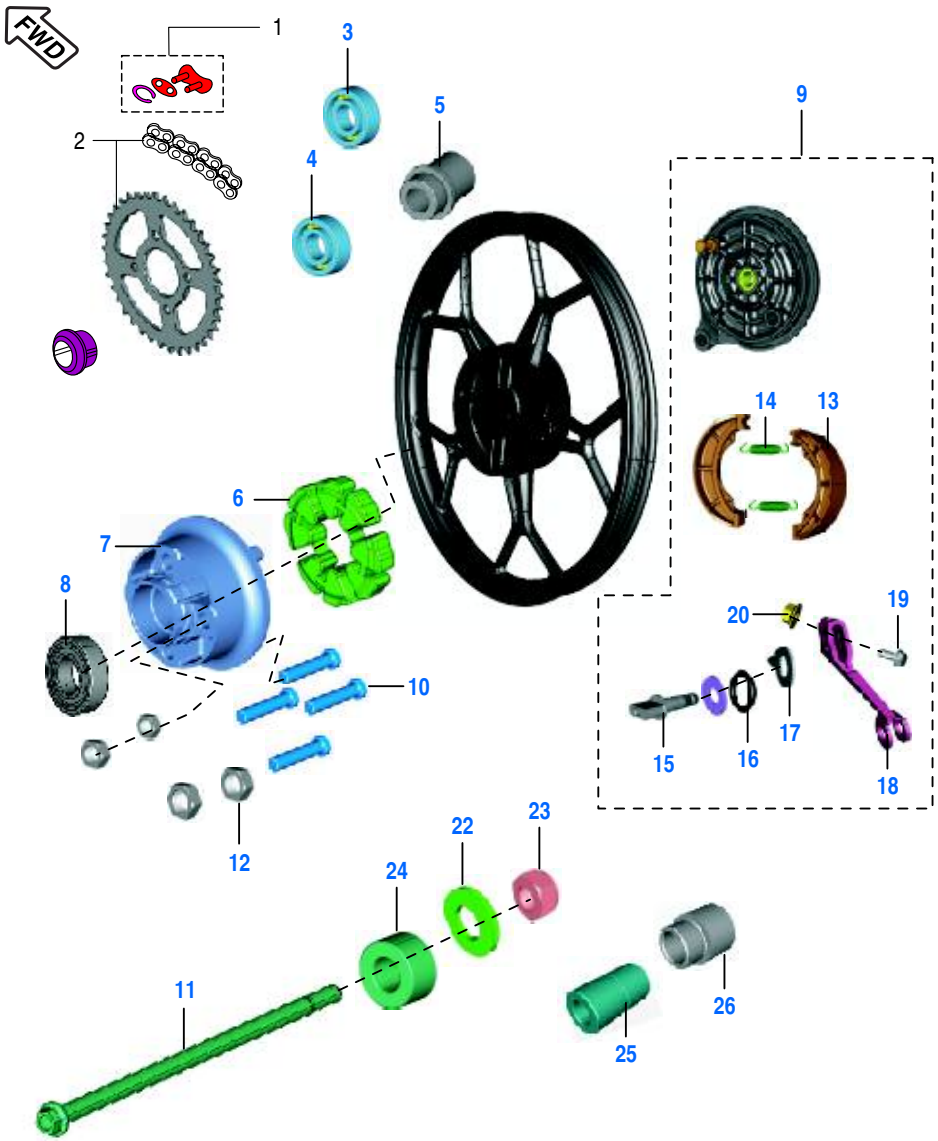

Plate No.: 38

Rear Hub (125 T & 100 T)

No.	Part No.	Description	Qty.			Remarks
			125 ST	125 T	100 T	
24	PA 1312 16	Collar Assy	–	--	1	
	PA 1312 21	Collar Assy	--	1	--	
25	PA 1312 17	Collar	--	1	1	
26	PA 1318 06	Sleeve	–	--	1	
	JZ 1318 11	Sleeve	--	1	–	
27	DX 1510 15	Plain Washer	--	1	–	N.I.
	LD B000 29	Washer Rear Axle RH	--	1	–	
28	LC A000 01	Nut Hex M20X1X12	--	1	–	

FWD Front Wheel Direction

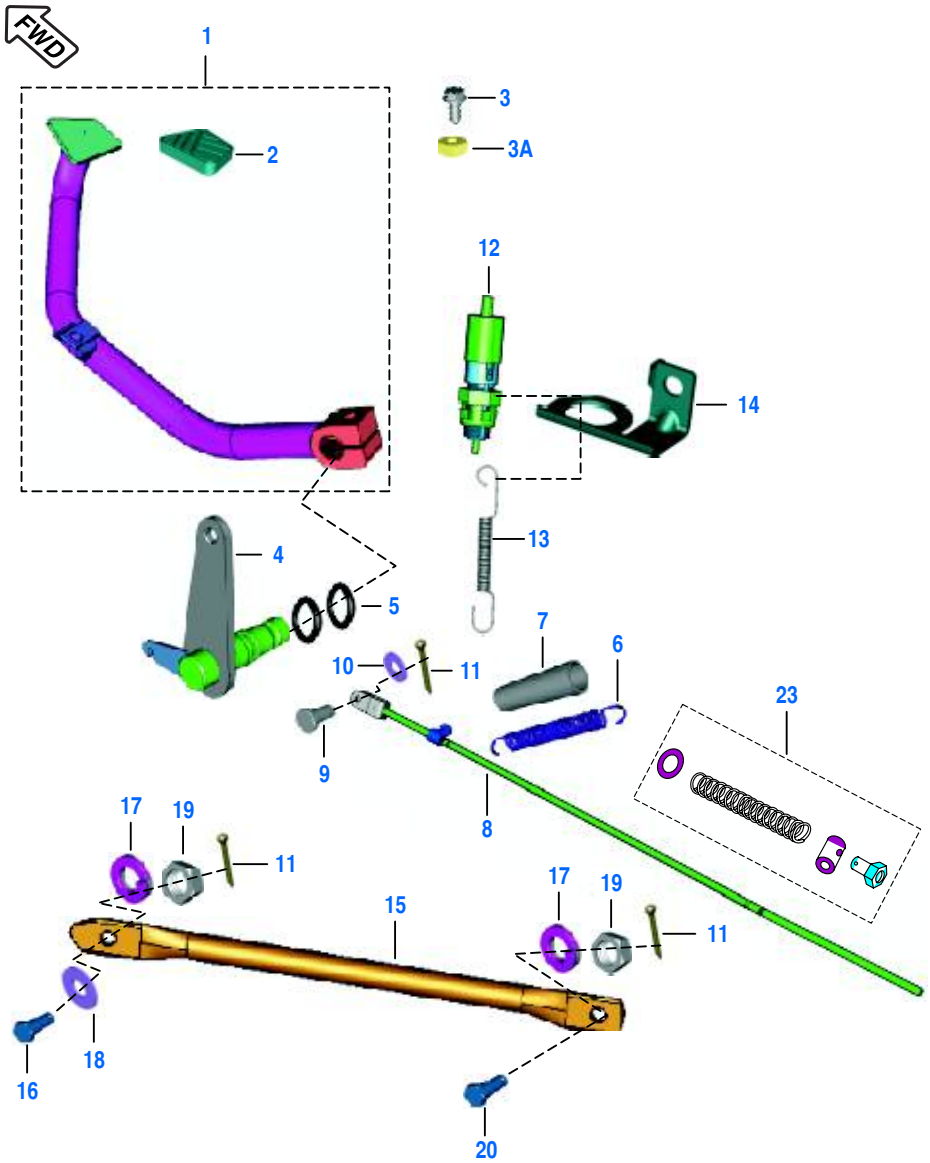

FWD Front Wheel Direction

Plate No.: 39

Rear Brake Pedal

No.	Part No.	Description	Qty.			Remarks
			125 ST	125 T	100 T	
1	JZ 1610 09	Assembly Brake Pedal	1	--	--	
	PA 1610 01	Lever Brake Pedal	--	1	1	
2	JZ 1610 19	Pad Brake Pedal	1	1	1	
3	39 1063 01	Screw Hex Head	1	1	1	
3A	39 0292 15	Nut M6	1	1	1	
4	JZ 1610 11	Shaft Assly Brake Lever	1	1	1	
5	39 1537 21	Ring - O	2	2	2	
6	JD 1610 02	Spring Brake Pedal	1	1	1	
7	JD 1610 06	Sleeve Brake Return Spring	1	1	1	
8	JZ 1318 10	Brake Rod	1	--	--	
	PA 1318 28	Brake Rod	--	1	1	
9	JZ 1318 75	Pin Brake Rod	1	1	1	
10	39 0198 11	Washer - Plain	1	1	1	
11	39 0808 08	Pin - Split	3	3	3	
12	31 2010 79	Rear Brake Switch	1	1	1	
13	JM 1910 14	Spring Brake Switch	1	1	1	
15	DS 1510 25	Rod - Torque	1	--	--	
	DJ 1510 42	Rod - Torque	--	1	1	
16	DH 1510 29	Bolt - Step :- Torque Rod	1	1	1	
17	39 0789 12	Washer - Spring	2	2	2	
18	39 1540 11	Washer - Plain	1	1	1	
19	39 0694 15	Nut - Hexagon Lock	2	2	2	M8 X 1.25
20	30 1510 96	Bolt - Hexagon	1	1	1	
21	36 DK00 17	Kit Hardware Br Rod	1	1	1	Refer Page No.124

Brand ID: 001MC649 (DISCOVER 125 ST)
Brand ID: 001MC661 (DISCOVER 125 T)
Brand ID: 001MC639 (DISCOVER 100 T)

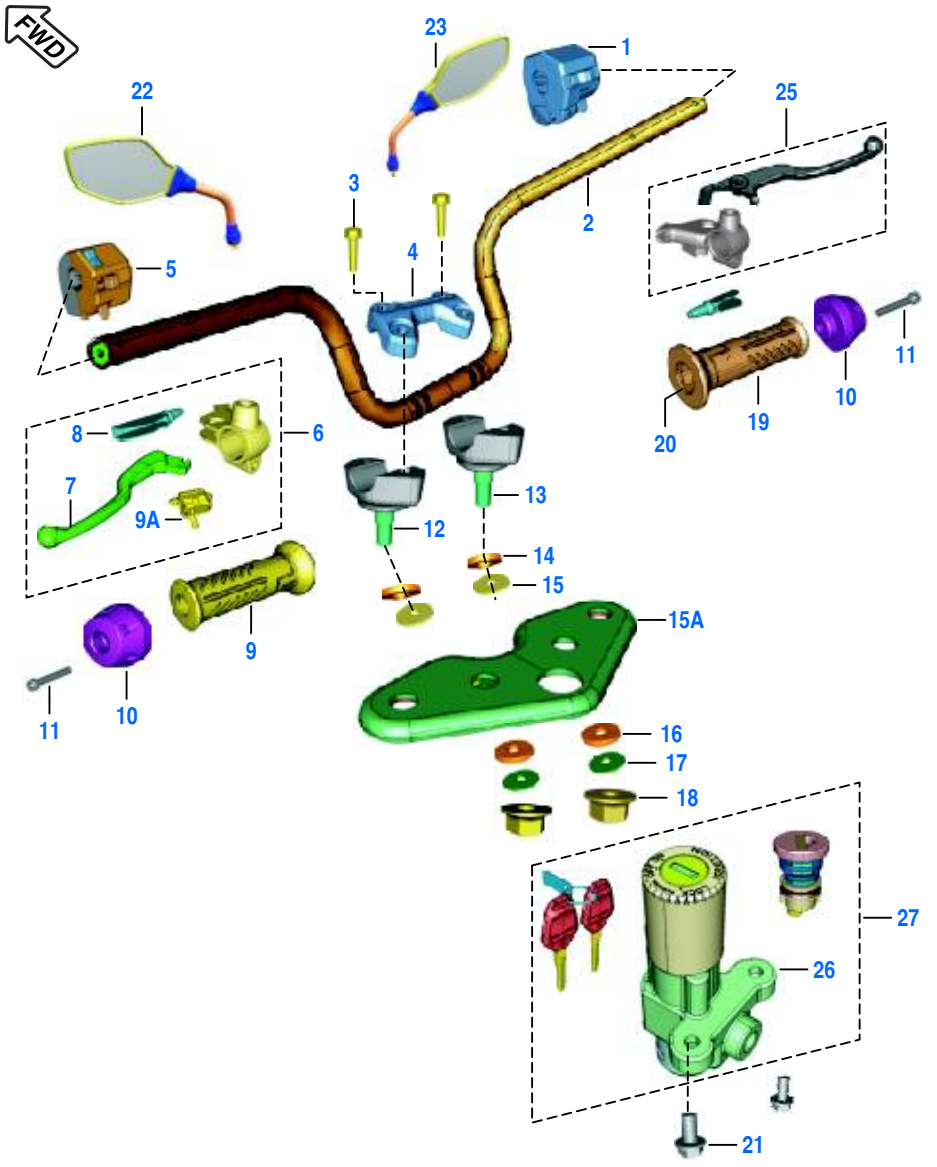

Front Wheel Direction

Plate No.: 40

Handle Bar Assly

No.	Part No.	Description	Qty.			Remarks
			125 ST	125 T	100 T	
1	PA 4014 05	Control Switch RH	1	1	1	
2	JZ 1510 70	Handle Bar	1	1	1	
3	39 1714 04	Bolt - Flanged	4	4	4	
4	JZ 1810 07	Holder Handle	1	--	1	
	PA 1810 01	Holder Handle Upper	--	1	--	
5	JB 4014 00	Control Switch LH	1	1	1	
6	PA 4014 00	Lever & Support Holder	1	1	1	Asy LH
7	DJ 1910 55	Lever Grip Left	1	1	1	
8	DS 1910 52	Lever Boot LH For	1	1	1	Clutch Switch
9	JZ 1510 64	Hand Grip LH	1	1	1	
9A	PA 4014 01	Clutch Switch	1	1	1	DJ201246-Vertical Base
10	JZ 1510 69	Handle Bar Weight	2	2	2	
11	LA C000 31	Bolt Socket	2	2	2	
12	JZ 1810 13	Holder Lower LH	1	--	1	
	PA 1810 00	Holder Lower LH	--	1	--	
13	JZ 1810 12	Holder Lower RH	1	--	1	
	PA 1810 02	Holder Lower RH	--	1	--	
14	DS 1810 07	Washer Handle Upper	2	2	2	
15	JZ 1510 78	Damper Upper	2	2	2	
15A	JZ 1510 45	Holder Fork Upper	1	1	1	
16	JZ 1510 79	Damper Lower	2	2	2	
17	DS 1510 10	Washer	2	2	2	
18	39 2249 15	Nut	2	2	2	
19	JZ 1510 65	Hand Grip RH	1	1	1	

Brand ID: 001MC649 (DISCOVER 125 ST)
Brand ID: 001MC661 (DISCOVER 125 T)
Brand ID: 001MC639 (DISCOVER 100 T)

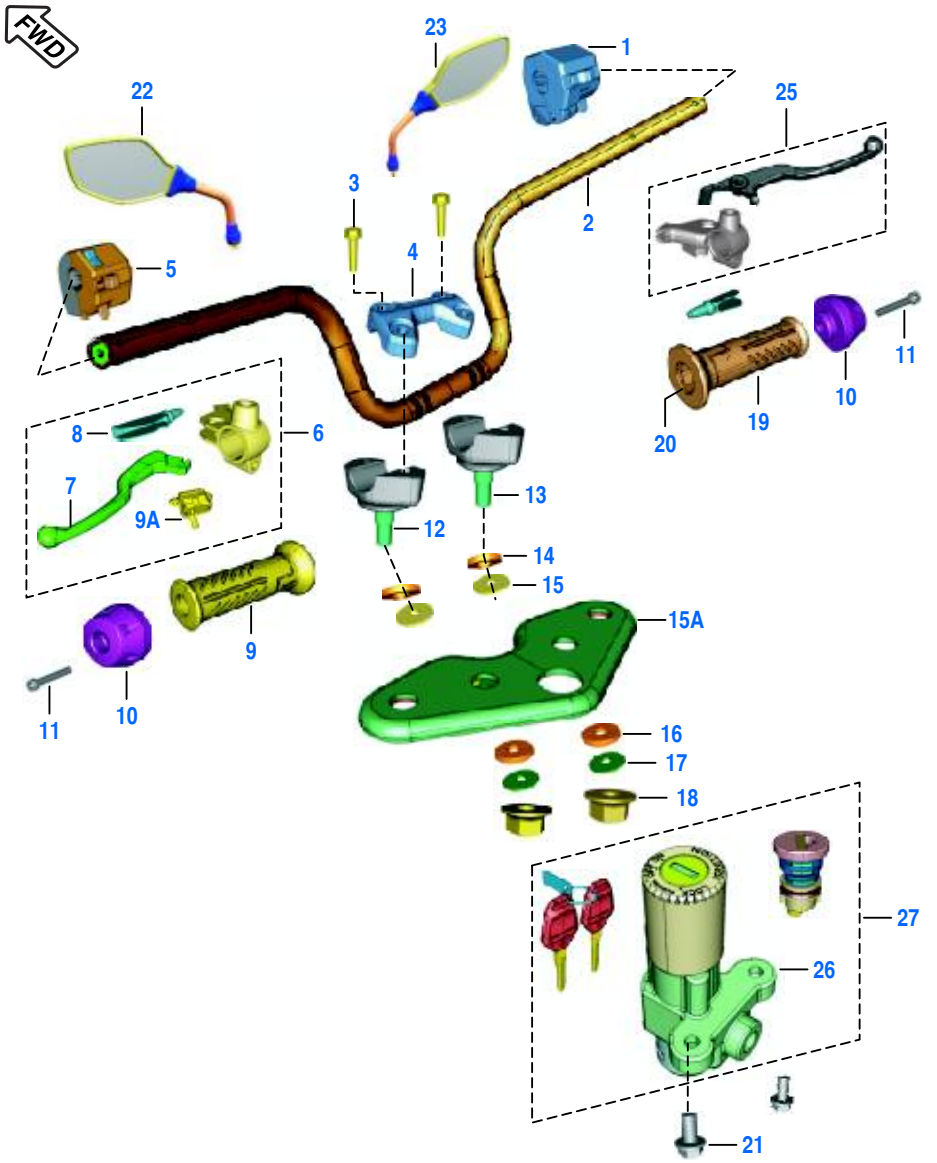

FWD Front Wheel Direction

Plate No.: 40

Handle Bar Assly

No.	Part No.	Description	Qty.			Remarks
			125 ST	125 T	100 T	
20	DX 1910 01	Pipe Throttle	1	1	1	
21	39 1912 04	Bolt Flange	2	2	2	
22	JZ 2316 00	Mirror LH	1	1	1	
23	JZ 2316 01	Mirror RH	1	1	1	
24	30 1910 48	Band	2	2	2	N.I.
25	DX 1910 09	Lever Assembly RH	–	1	1	Drum Brake
26	JZ 4014 00	Ignition Switch	1	1	1	
27	JZ 2326 00	Lock Set	1	1	1	
28	DD 2011 70	Front Brake Switch	–	1	1	

Brand ID: 001MC649 (DISCOVER 125 ST)
Brand ID: 001MC661 (DISCOVER 125 T)
Brand ID: 001MC639 (DISCOVER 100 T)

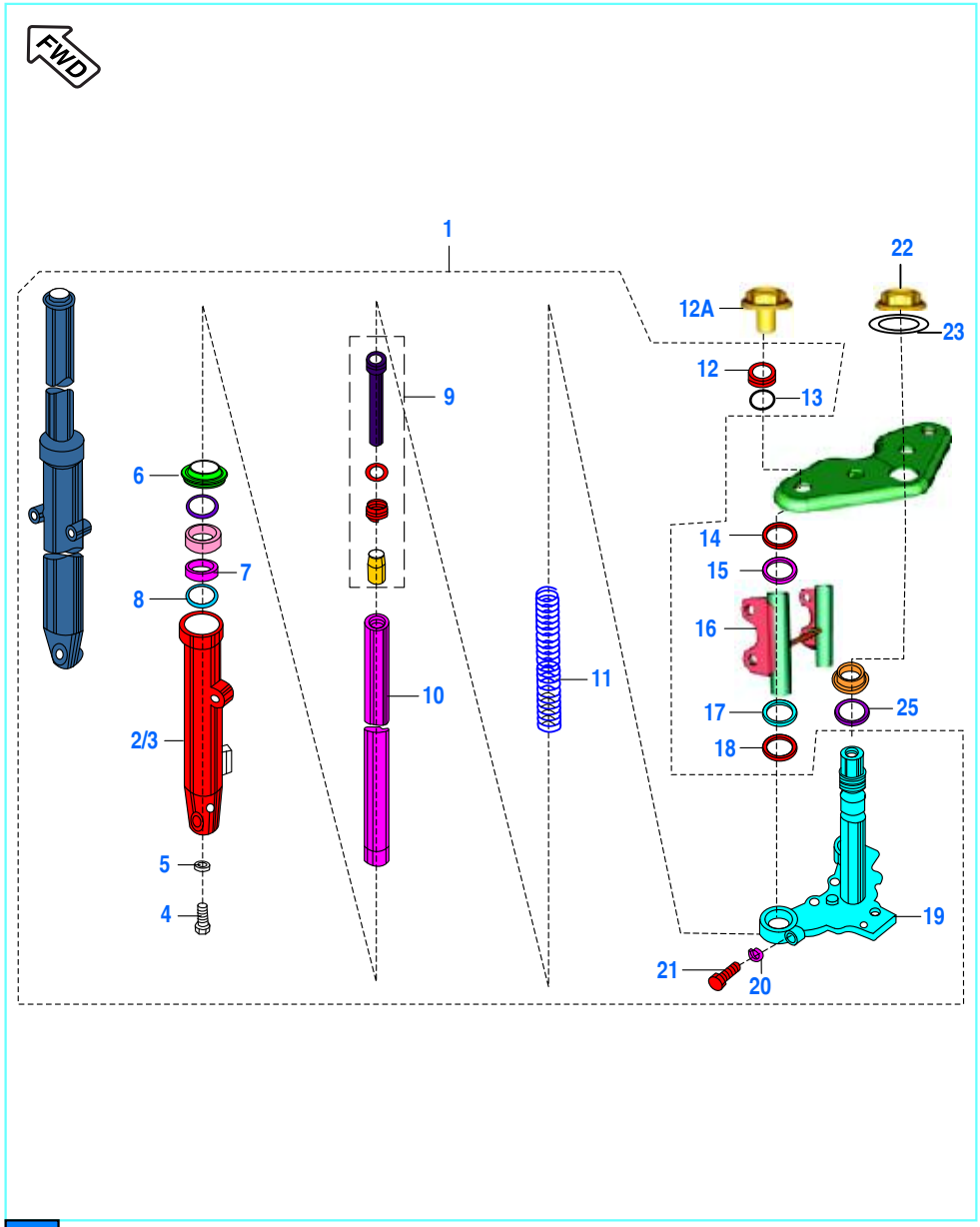

FWD Front Wheel Direction

Plate No.: 41

Front Fork

No.	Part No.	Description	Qty.			Remarks
			125 ST	125 T	100 T	
1	JZ 1210 27	Fork Assly Comp-Disc	1	1	–	Disc Brake
	PA 1210 12	Fork Assly	--	1	1	Drum Brake
2	JZ 1210 30	Tube Outer LH	1	1	–	Disc Brake
	PA 1210 15	Tube Outer LH	--	1	1	Drum Brake
3	JZ 1210 31	Tube Outer RH	1	1	–	Disc Brake
	PA 1210 16	Tube Outer RH	--	1	1	Drum Brake
4	30 1810 25	Socket Head Bolt	2	2	2	
5	30 1810 26	Gasket	2	2	2	
6	36 DF18 01	Kit Oil Seal Fork	2	2	2	
7	JK 1210 07	Guide Bush (Dia. 30)	2	2	2	
8	JK 1210 09	Washer-Guide Bush	2	2	2	
9	36 JZ01 07	Kit Cylinder Fork	2	2	--	
	JW 1510 23	Fork Pipe Spinning	--	2	2	
10	JZ 1210 40	Fork Pipe Spinning	2	2	2	
11	PA 1210 17	Spring Main	2	2	2	
12	DS 1810 12	Bolt Fork	2	2	2	
12A	59 0400 06	Hex Bolt	2	2	2	
13	30 1810 29	'O' Ring	2	2	2	
14	DF 1810 88	Damper Fork Cover	2	--	--	Fr. Fork
	PF 1210 28	Damper Fork Cover	--	2	2	
15	DD 1810 90	Cover Trail B	2	--	–	
	DJ 1810 43	Cover Trail B	–	2	2	
16	JZ 1510 47	Assembly Lamp Shade	2	--	--	
	PA 1510 05	Assembly Lamp Shade	--	1	1	

Brand ID: 001MC649 (DISCOVER 125 ST)
Brand ID: 001MC661 (DISCOVER 125 T)
Brand ID: 001MC639 (DISCOVER 100 T)

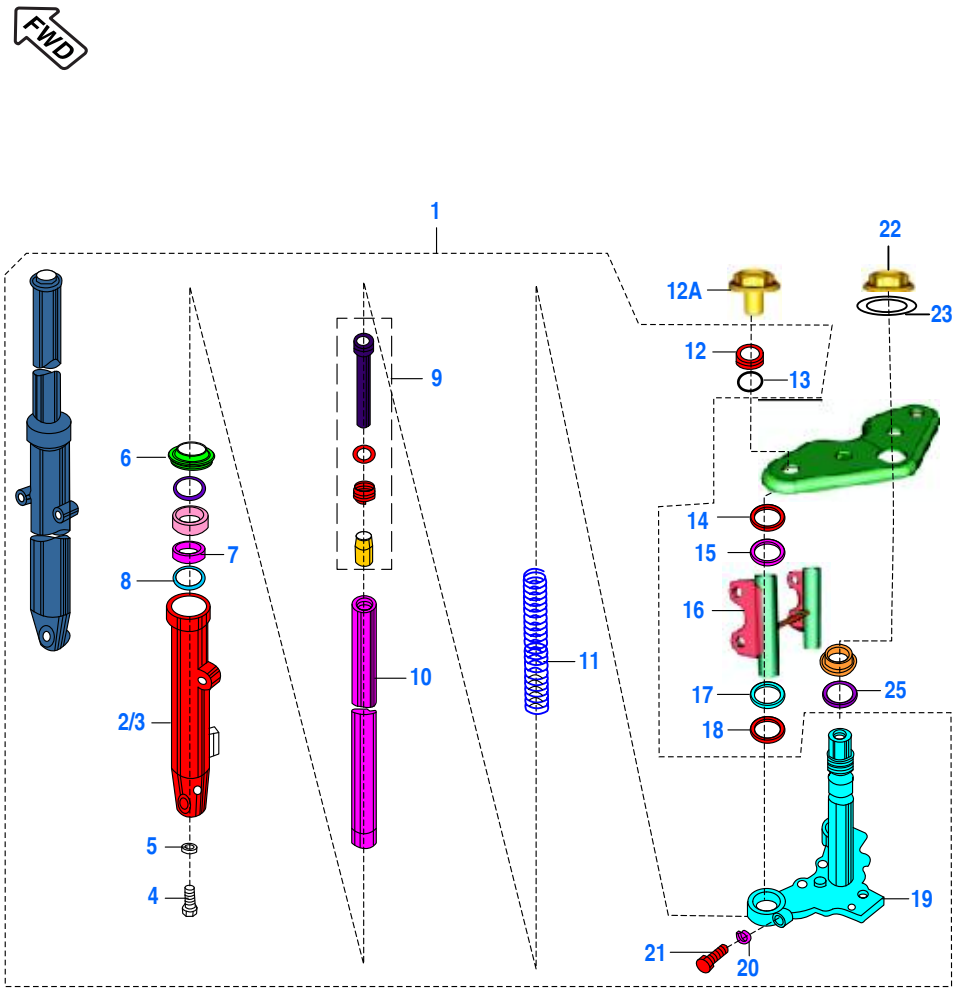

Front Wheel Direction

Plate No.: 41

Front Fork

No.	Part No.	Description	Qty.			Remarks
			125 ST	125 T	100 T	
17	DD 1810 91	Cover Trail	2	--	–	
	DJ 1810 42	Cover Trail	–	2	2	
18	30 1810 45	Cushion Rubber	2	--	–	
	DJ 1810 85	Cushion Rubber	–	2	2	
19	JZ 1210 15	Assembly Under Bracket	1	1	1	
20	39 0789 12	Washer Spring	2	2	2	
21	39 1181 01	Bolt Hexagon Head M8X40	2	2	2	
22	DS 1810 15	Cap Nut Fork	1	1	1	
23	DS 1810 16	Plain Washer	1	1	1	
24	JZ 1318 80	Hose Clamp	1	--	--	
25	JZ 1510 80	Seal Bottom	1	–	--	Old
	JZ 1510 91	Seal Dust	1	1	1	From 05.01.2013

Brand ID: 001MC649 (DISCOVER 125 ST)
Brand ID: 001MC661 (DISCOVER 125 T)
Brand ID: 001MC639 (DISCOVER 100 T)

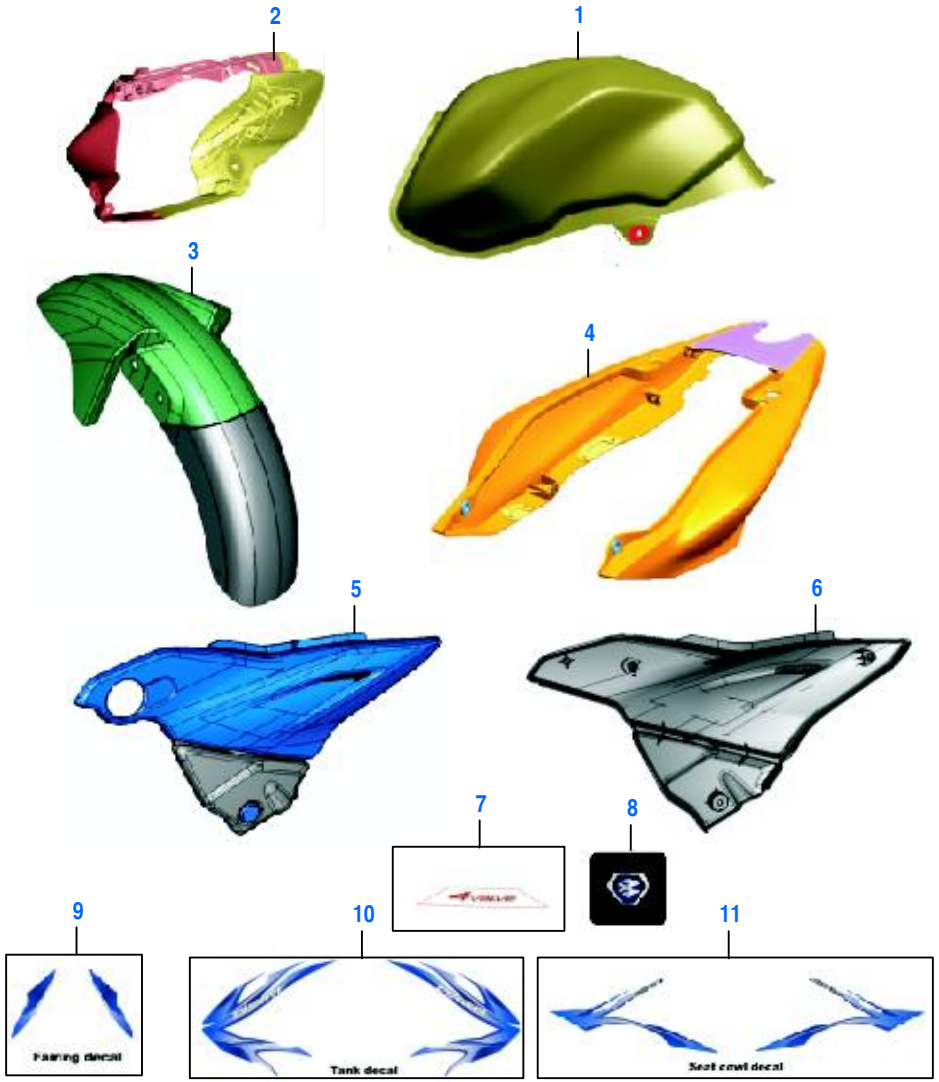

Plate No.: 42

Painted Parts and Decals (125 ST & 100 T)

No.	Part No.	Description	Qty.			Remarks
			125 ST	125 T	100 T	
1	PA 7102 3C	Fuel Tank	1	--	1	Black-Red Decal
	PA 7102 3B	Fuel Tank	1	--	1	Black Blue Decal
	PA 7102 3F	Fuel Tank	1	--	1	Flame Red
	PA 7102 5R	Fuel Tank	1	--	1	Brilliant Blue
2	JZ 7403 3F	Cowling Pntd Black	1	--	1	Flame Red Dcl
	JZ 7403 3B	Cowling Pntd Black	1	--	1	Blue Dcl
	JZ 7403 3C	Cowling Pntd Red	1	--	1	Red Dcl
	JZ 7403 5R	Cowling Pntd Blue	1	--	1	Brilliant Blue Dcl
3	JZ 7306 3F	Fr Fender Pntd	1	1	1	Bl-Flame Red
	JZ 7306 5J	Fr Fender Pntd	1	1	1	Mid Night Bl
	JZ 7306 5R	Fr Fender Pntd	1	1	1	Brilliant Blue
4	JZ 7305 3F	Seat Cowl Pntd - 125 ST	1	–	--	Bl-Flame Red Dcl
	JZ 7305 3B	Seat Cowl Pntd - 125 ST	1	–	--	Black-Blue Dcl
	JZ 7305 3C	Seat Cowl Pntd - 125 ST	1	–	--	Red Dcl
	JZ 7305 5R	Seat Cowl Pntd - 125 ST	1	–	--	Brilliant Blue
	PA 7502 3F	Seat Cowl Black - 100 T	--	--	1	Flame Red Dcl
	PA 7502 3B	Seat Cowl Black - 100 T	--	--	1	Blue Decal
	PA 7502 3C	Seat Cowl Red - 100 T	--	--	1	Red Decal
	PA 7502 5R	Seat Cowl Blue - 100 T	--	--	1	Brilliant Blue Dc
5	JZ 7205 1R	Side Panel LH Silver Paint	1	--	1	
6	JZ 7206 1R	Side Panel RH Silver Paint	1	--	1	
7	JZ 2331 78	4 Valve Dcl	2	–	2	

Brand ID: 001MC649 (DISCOVER 125 ST)
Brand ID: 001MC661 (DISCOVER 125 T)
Brand ID: 001MC639 (DISCOVER 100 T)

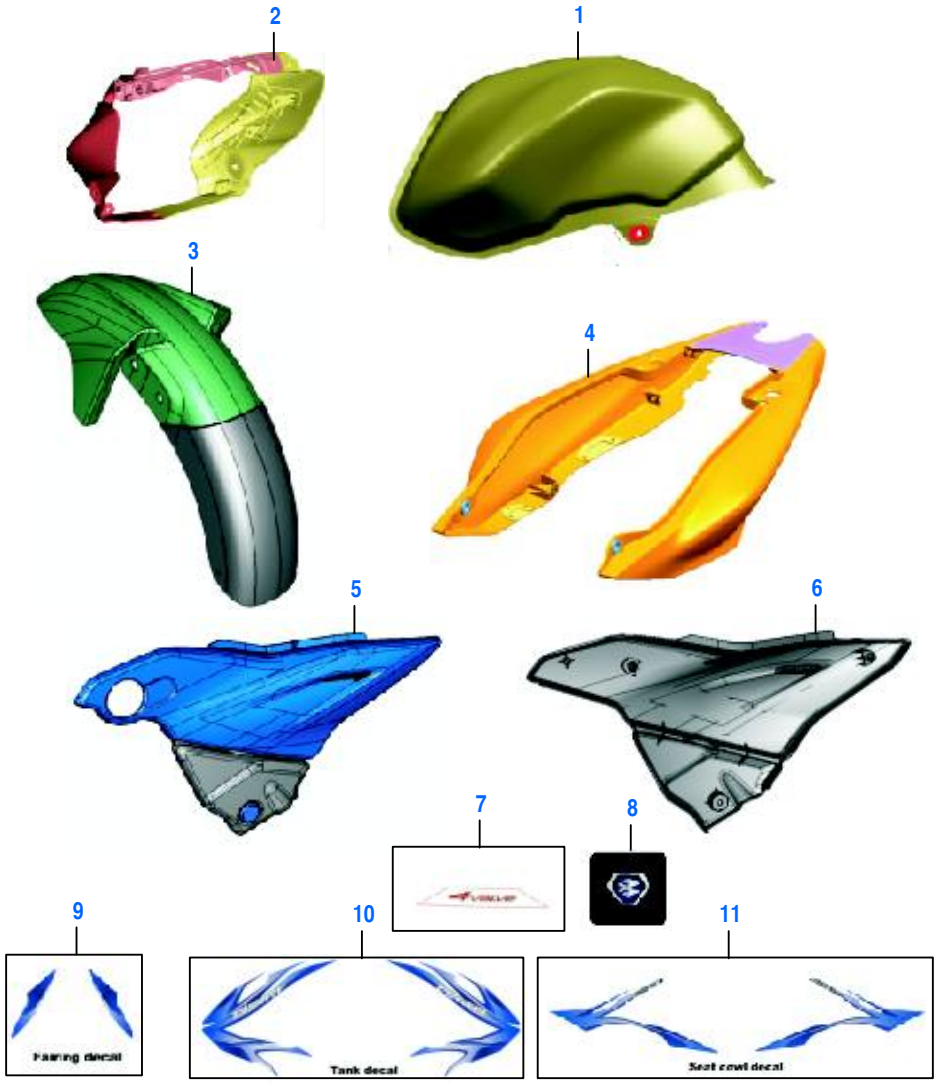

Plate No.: 42

Painted Parts and Decals (125 ST & 100 T)

No.	Part No.	Description	Qty.			Remarks
			125 ST	125 T	100 T	
8	JZ 2331 77	Fairing Decal B-logo	1	1	1	
9	36 JZ00 91	Kit Faring Dcl D102 Bl-Red	1	--	1	
	36 JZ00 89	Kit Faring Dcl D102 Bl-Blue	1	--	1	
	36 JZ00 95	Kit Faring Dcl D102 Red	1	--	1	
	36 JZ00 93	Kit Faring Dcl D102 Blue	1	--	1	
10	PA 2331 01	Kit Tank Decal Bl-FlameRed	1	--	1	
	PA 2330 94	Kit Tank Decal Bl-Blue	1	--	1	
	PA 2331 17	Kit Tank Decal Red	1	--	1	
	PA 2331 09	Kit Tank Decal Blue Br	1	--	1	
11	36 JZ00 92	Kit Dcl S Cowl - 125 ST	1	--	--	Bl-Flame Red
	36 JZ00 90	Kit Dcl S Cowl - 125 ST	1	--	--	Bl-Blue
	36 JZ00 96	Kit Dcl S Cowl - 125 ST	1	--	--	Red
	36 JZ00 94	Kit Dcl S Cowl - 125 ST	1	--	--	Blue
12	36 PA01 01	Kit Dcl S Cowl - 100 T	--	--	1	Bl-Blue
	36 PA01 03	Kit Dcl S Cowl - 100 T	--	--	1	Red
	36 PA01 02	Kit Dcl S Cowl - 100 T	--	--	1	Blue

Brand ID: 001MC649 (DISCOVER 125 ST)
Brand ID: 001MC661 (DISCOVER 125 T)
Brand ID: 001MC639 (DISCOVER 100 T)

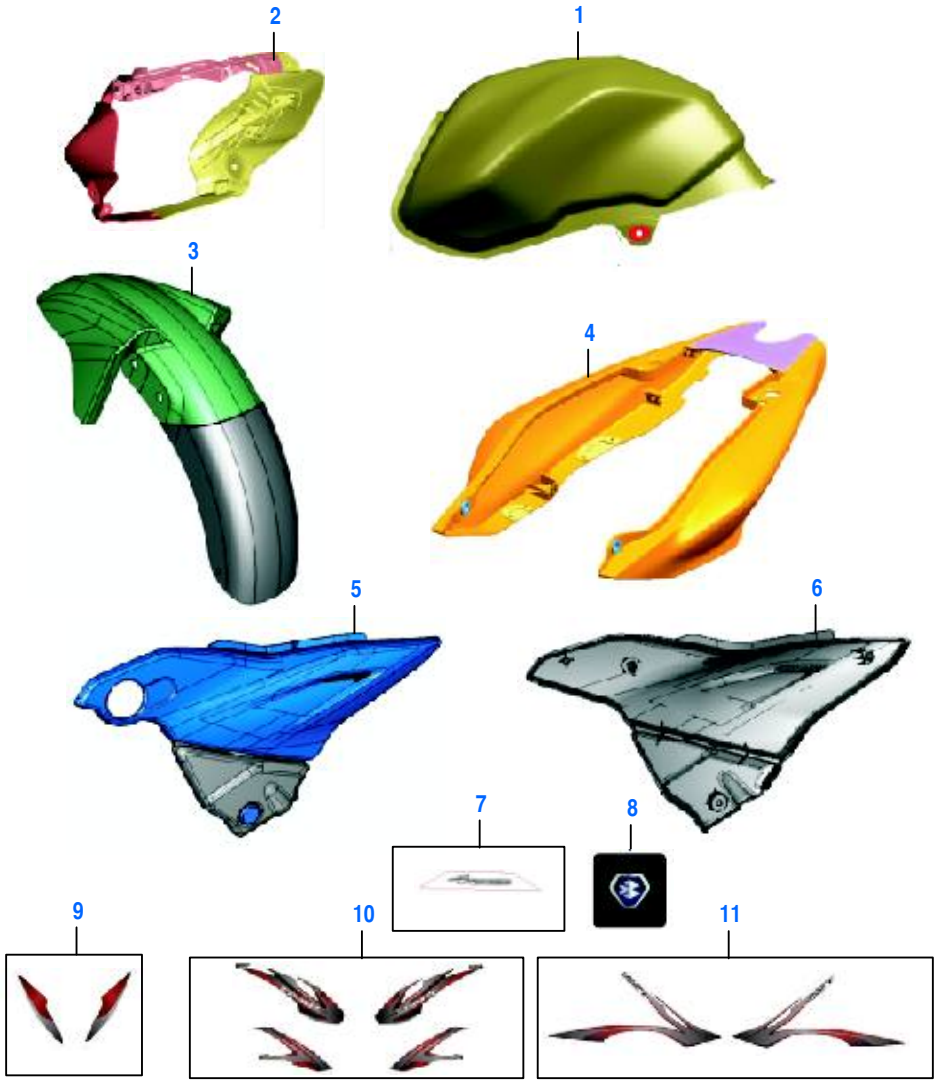

Plate No.: 43

Painted Parts and Decals (125 T)

No.	Part No.	Description	Qty.			Remarks
			125 ST	125 T	100 T	
1	PA 7103 3B	Fuel Tank Black Blue Decal	--	1	--	
	PA 7103 3C	Fuel Tank Black Red Decal	--	1	--	
	PA 7103 3F	Fuel Tank Flame Red Decal	--	1	--	
	PA 7103 5R	Fuel Tank Brilliant Blue Decal	--	1	--	
2	JZ 7404 3B	Cowling Blk Blue Decal	--	1	--	
	JZ 7404 3C	Cowling Blk Red Decal	--	1	--	
	JZ 7404 3F	Cowling Flame Red Decal	--	1	--	
	JZ 7404 5R	Cowling Brilliant Blue Decal	--	1	--	
3	JZ 7306 3F	Fr Fender Pntd	1	1	1	Bl-Flame Red
	JZ 7306 5J	Fr Fender Pntd	1	1	1	Mid Night Bl
	JZ 7306 5R	Fr Fender Pntd	1	1	1	Brilliant Blue
4	PA 7503 3B	Seat Cowl Black Blue	–	1	--	
	PA 7503 3C	Seat Cowl Black Red	--	1	--	
	PA 7503 3F	Seat Cowl Flame Red	--	1	--	
	PA 7503 5R	Seat Cowl Brilliant Blue	--	1	--	
5	PA 7202 1E	Side Panel LH	--	1	--	
6	PA 7203 1E	Side Panel RH	--	1	–	
7	PA 2332 26	Decal 4 Valve Chrome	--	1	–	
8	JZ 2331 77	Fairing Decal B-logo	1	1	1	

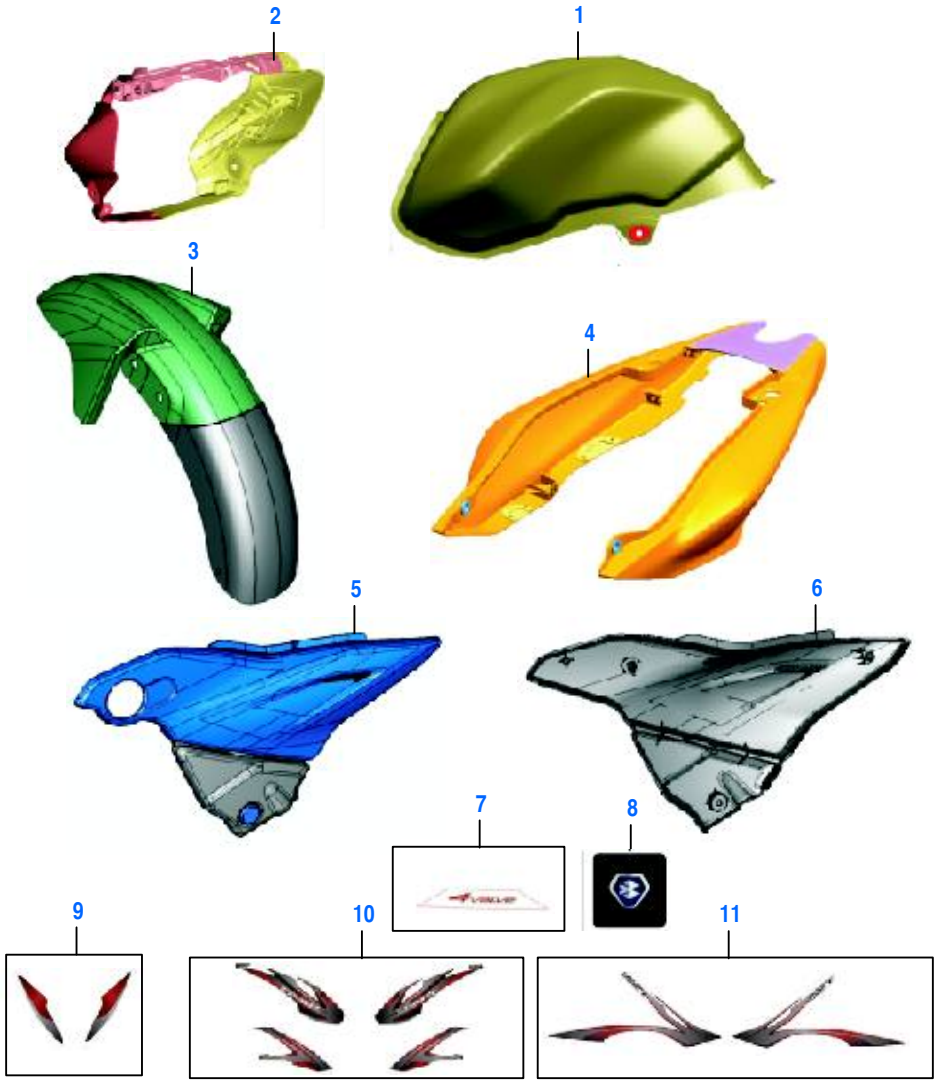

Plate No.: 43

Painted Parts and Decals (125 T)

No.	Part No.	Description	Qty.			Remarks
			125 ST	125 T	100 T	
9	36 PA01 17	Kit Decal Fairing Bl-blue	--	1	--	
	36 PA01 18	Kit Decal Fairing Bl-red	--	1	--	
	36 PA01 19	Kit Dcl Fairing Blue	--	1	--	
	36 PA01 20	Kit Decal Fairing Red	--	1	--	
10	PA 2331 83	Decal Kit Tank Bl-blue	--	1	–	
	PA 2331 93	Decal Kit Tank Bl-red	--	1	--	
	PA 2332 03	Decal Kit Tank Blue	--	1	--	
	PA 2332 13	Decal Kit Tank Red	--	1	–	
11	36 PA01 11	Kit Dcl S Cowl - 125 T	--	1	--	Bl-Flame Red
	36 PA01 12	Kit Dcl S Cowl - 125 T	--	1	--	Bl-Blue
	36 PA01 09	Kit Dcl S Cowl - 125 T	--	1	--	Red
	36 PA01 10	Kit Dcl S Cowl - 125 T	--	1	--	Blue

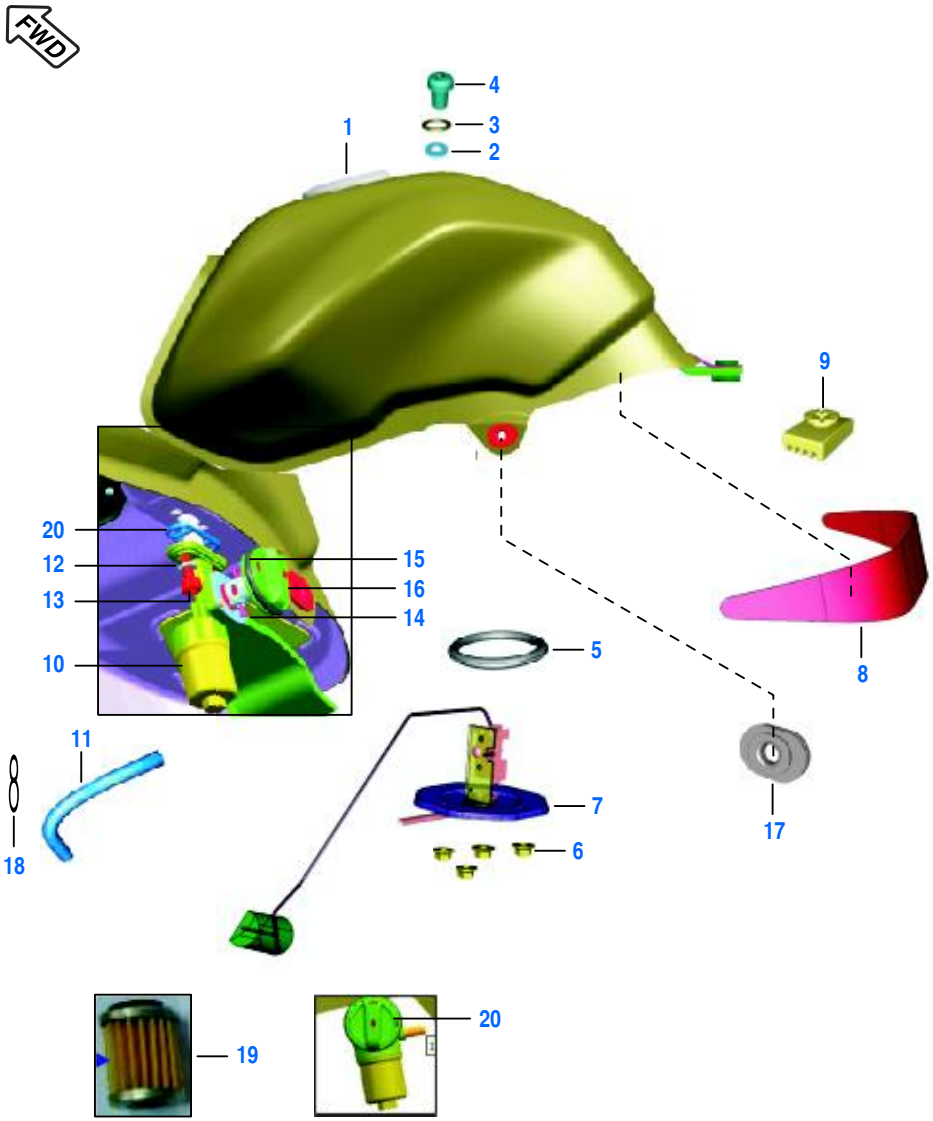

FWD Front Wheel Direction

Plate No.: 44

Petrol Tank, Cap Tank and Gauge Fuel

No.	Part No.	Description	Qty.			Remarks
			125 ST	125 T	100 T	
1	JZ 1710 04	Cap Fuel Tank	1	1	1	
2	39 2179 24	Washer	2	2	2	
3	30 1410 31	Ring - 'O'	2	2	2	
4	39 0761 01	Screw Pan Cross - M5	2	2	2	
5	39 2758 21	Ring - O I.D. 40 X 5	1	1	1	
6	39 2484 15	Nut - Flange :- M5	4	4	4	
7	JZ 4026 00	Gauge Fuel Tank	1	1	1	
8	JZ 1710 17	Tape Seat	1	1	1	
9	JD 1110 52	Grommet Tank mtg	1	1	1	
10	JZ 1718 07	Assembly Fuel Tap	1	1	1	
11	JZ 1718 29	Tube Fuel	1	1	1	
12	39 0740 11	Washer (Non-Metallic)	2	2	2	
13	DD 1410 22	Bolt - Flanged	2	2	2	
14	JL 1718 03	Pin Snap	1	1	1	
15	JL 1710 60	'O' Ring Knob	1	1	1	
16	JZ 1718 17	Knob	1	1	1	
17	DS 1410 12	Grommet Side Cover	2	2	2	
18	DK 1410 41	Pipe Clip	2	2	2	
19	JZ 1718 18	Paper Filter	1	1	1	
20	30 1410 39	Packing	1	1	1	
21	DZ 1410 75	4 Valve Washer	1	1	1	N.I.

Brand ID: 001MC649 (DISCOVER 125 ST)
Brand ID: 001MC661 (DISCOVER 125 T)
Brand ID: 001MC639 (DISCOVER 100 T)

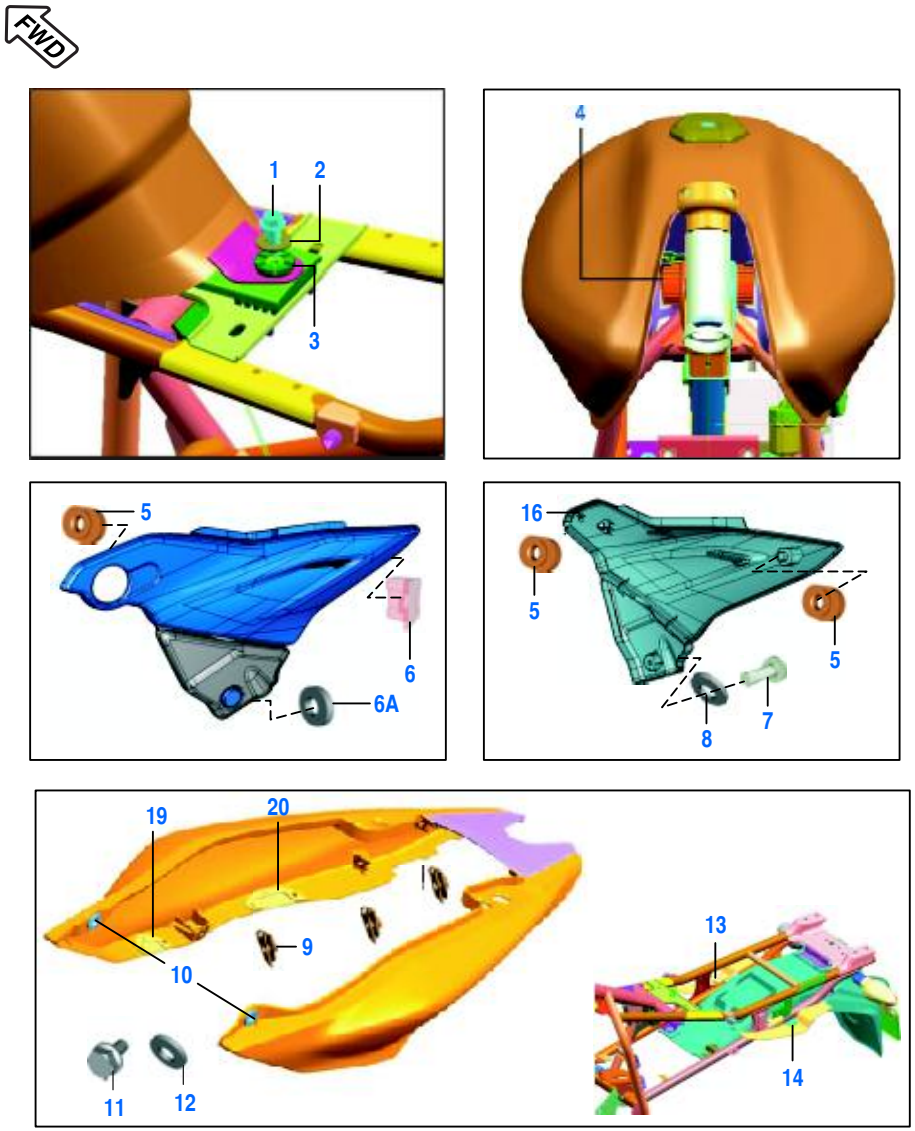

FWD Front Wheel Direction

Plate No.: 45

Fittings - Petrol Tank Cover, Side Covers & Cover Seat

No.	Part No.	Description	Qty.			Remarks
			125 ST	125 T	100 T	
1	39 1951 04	Bolt Flange	1	1	1	
2	39 2424 11	Plain Washer	1	1	1	
3	JD 1110 52	Grommet Tank Mtg	1	1	1	
4	DJ 1410 08	Damper - Front	2	2	2	
5	DS 1410 12	Grommet- Side Cover: Fr	3	3	3	
6	JW 1610 17	Grommet Side / C Rear	1	--	--	
6A	DU 1611 02	Damper	1	1	1	
7	DG 1611 21	Screw	1	1	1	
8	39 1789 24	Washer - Nylon	1	1	1	
9	DJ 1612 29	Clip Nut M5	2	2	2	
10	JL 1812 19	Grommet -1 Seat Cowl	2	2	2	
11	39 1943 04	Bolt - Flanged	2	2	2	
12	LD A000 18	Washer 6.2X20X1.5	2	2	2	
13	JZ 1812 70	Flap Seat Cowl RH	1	--	--	
14	JZ 1812 69	Flap Seat Cowl LH	1	--	--	
15	LB U000 07	Screw Truss M5 X 15L	2	2	2	N.I.
16	JZ 1812 71	Damper Side Cover	2	2	2	
17	PA 1812 32	Grommet 1 LH	--	1	1	N.I.
18	PA 1812 33	Grommet 2 LH	--	1	1	N.I.
19	PA 1812 34	Grommet 1 RH	--	1	1	
20	PA 1812 35	Grommet 2 RH	--	1	1	

Brand ID: 001MC649 (DISCOVER 125 ST)
Brand ID: 001MC661 (DISCOVER 125 T)
Brand ID: 001MC639 (DISCOVER 100 T)

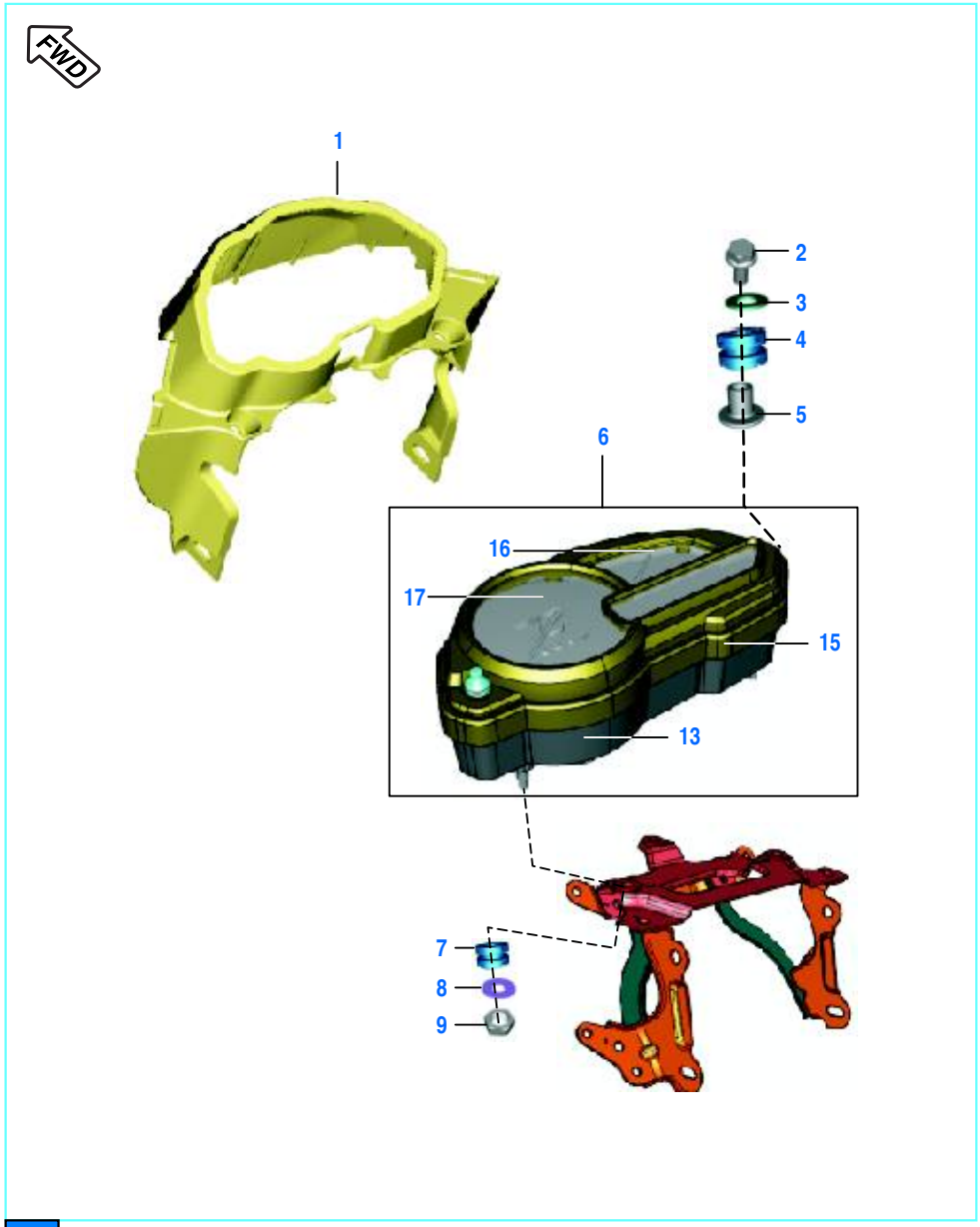

Front Wheel Direction

Plate No.: 46

Meter Assembly

No.	Part No.	Description	Qty.			Remarks
			125 ST	125 T	100 T	
1	PA 1812 26	Assembly Speedo Flap	1	1	1	
2	39 1552 04	Bolt Flange	3	3	3	
3	39 0711 11	Washer Plain -	3	3	3	OD15X ID 5.5X1.2T
4	JC 1410 15	Grommet Tank Cover	3	3	3	
5	JC 1410 16	Collar Tank Cover	3	3	3	
6	PA 4024 22	Speedometer Assembly	1	1	1	
7	JG 1812 38	Grommet Dashboard	3	3	3	
8	LD B000 07	Washer Plain	3	3	3	
9	39 0291 15	Nut Hexagoan	3	3	3	
10	PA 4024 32	Lamp 12V,2W	6	6	6	N.I.
11	PA 4024 31	Assly. Wiring Harness	1	1	1	N.I.
12	PA 4024 28	Sealing Ring	1	1	1	N.I.
13	PA 4024 27	Housing	1	1	1	
14	PA 4024 29	Grommet	1	1	1	N.I.
15	PA 4024 26	Top Cover Assly.	1	1	1	N.I.
16	PA 4024 25	Fuel Gauge	1	1	1	
17	PA 4024 24	Speedo & Trip Meter Assly.	1	1	1	

Brand ID: 001MC649 (DISCOVER 125 ST)
Brand ID: 001MC661 (DISCOVER 125 T)
Brand ID: 001MC639 (DISCOVER 100 T)

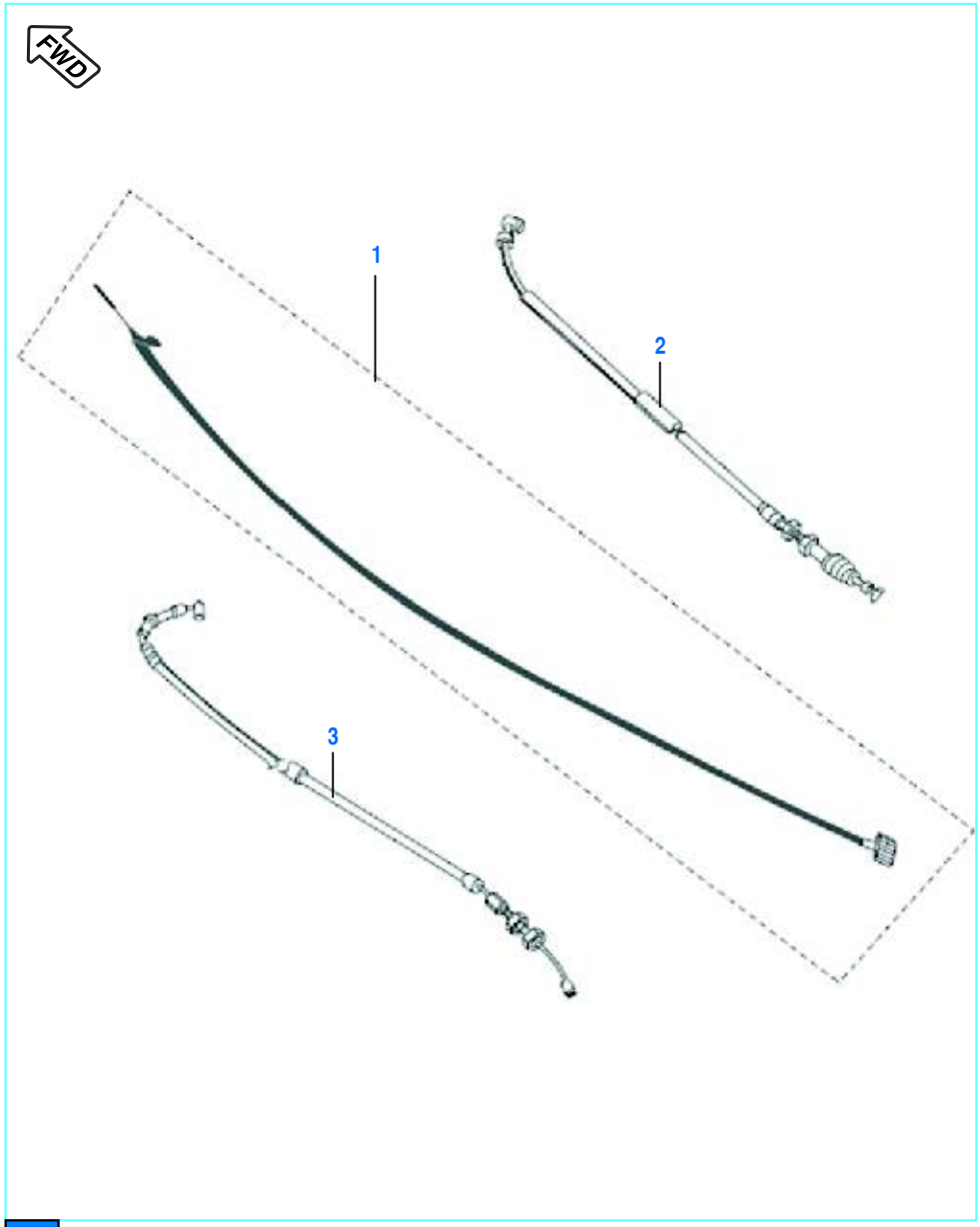

FWD Front Wheel Direction

Plate No.: 47

Control Cables

No.	Part No.	Description	Qty.			Remarks
			125 ST	125 T	100 T	
1	JZ 1612 10	Cable Speedometer	1	1	1	
2	JZ 1612 07	Cable Accelerator	1	--	--	
	PA 1612 00	Cable Accelerator	--	1	1	
3	JZ 1612 08	Cable Clutch	1	--	--	
	PA 1612 04	Cable Clutch	--	1	1	
4	DS 1910 54	Cable Brake	--	1	1	Drum Brake

Brand ID: 001MC649 (DISCOVER 125 ST)
Brand ID: 001MC661 (DISCOVER 125 T)
Brand ID: 001MC639 (DISCOVER 100 T)

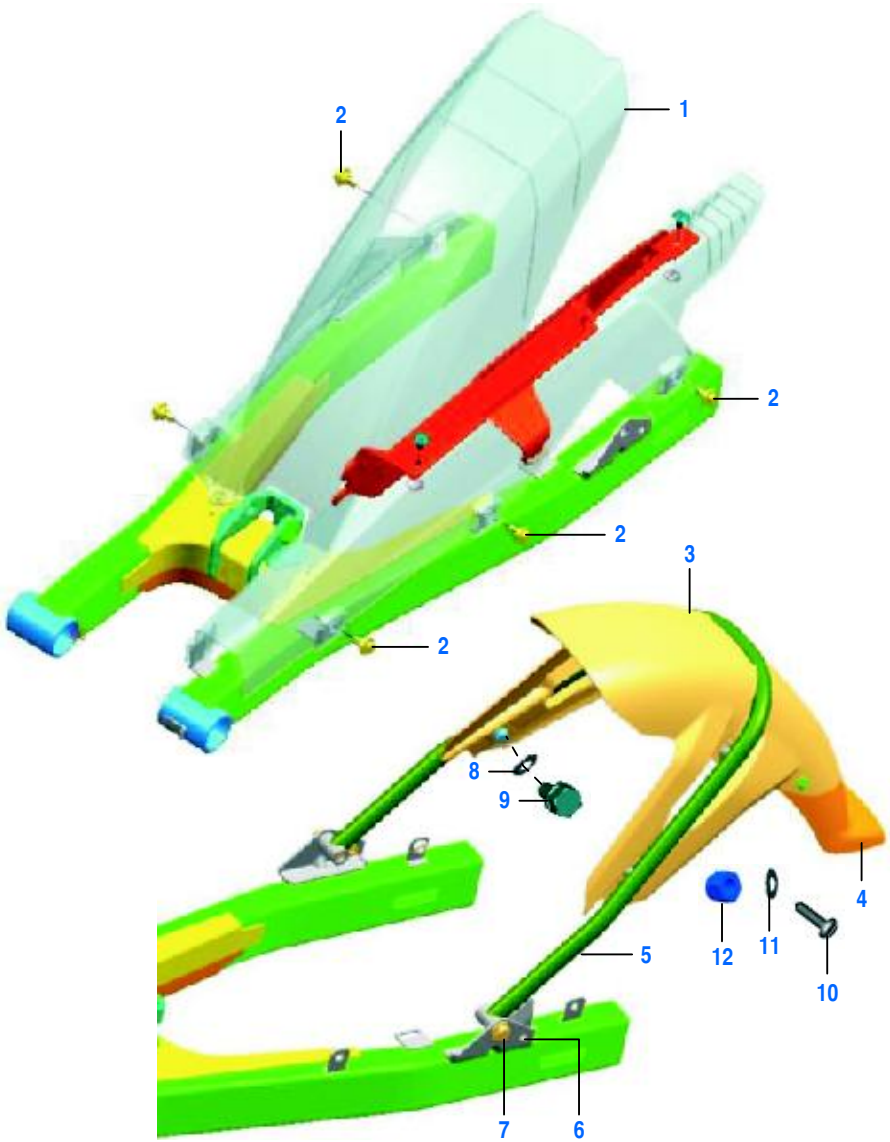

Front Wheel Direction

Plate No.: 48

Chain Case (125 ST)

No.	Part No.	Description	Qty.			Remarks
			125 ST	125 T	100 T	
1	JZ 1812 14	Assembly Chain Cover	1	--	--	
2	DS 1612 24	Bolt Stepped With Flange	5	--	--	
3	JZ 1814 20	Cover Mud Rear	1	--	--	
4	JZ 1814 21	Flap Mud Cover	1	--	--	
5	JZ 1810 09	Tube Rear Hugger Mtg	1	--	--	
6	LA D000 82	Hexagon Bolt With Flange	2	--	--	
7	LA E000 01	Bolt Flange	2	--	--	
8	39 0219 11	Plain Washer	5	--	--	
9	39 1680 04	Flange Bolt	5	--	--	
10	39 2420 01	Screw Pan Level	3	--	--	
11	39 0242 11	Plain Washer	3	--	--	
12	39 0326 15	Nut Nylon	3	--	--	

Brand ID: 001MC649 (DISCOVER 125 ST)
Brand ID: 001MC661 (DISCOVER 125 T)
Brand ID: 001MC639 (DISCOVER 100 T)

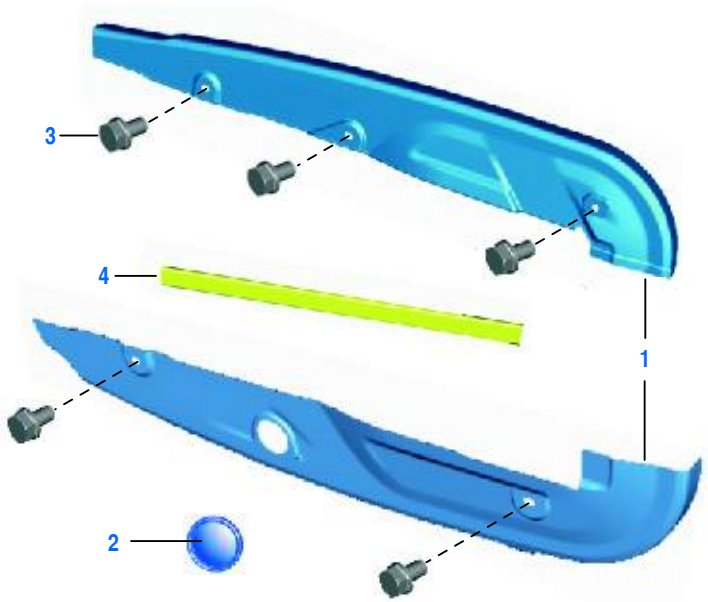

FWD Front Wheel Direction

Plate No.: 49

Chain Case (125 T & 100 T)

No.	Part No.	Description	Qty.			Remarks
			125 ST	125 T	100 T	
1	36 PA00 98	Kit Chain Case - 100 T	–	–	1	Refer Page No. 123
	36 PA01 14	Kit Chain Case - 125 T	--	1	–	Refer Page No. 126
2	15 1610 69	Rubber Cap	--	1	1	
3	JB 1812 39	Bolt	--	5	5	
4	DX 1610 52	Beading Chain Case	--	1	1	

Brand ID: 001MC649 (DISCOVER 125 ST)
Brand ID: 001MC661 (DISCOVER 125 T)
Brand ID: 001MC639 (DISCOVER 100 T)

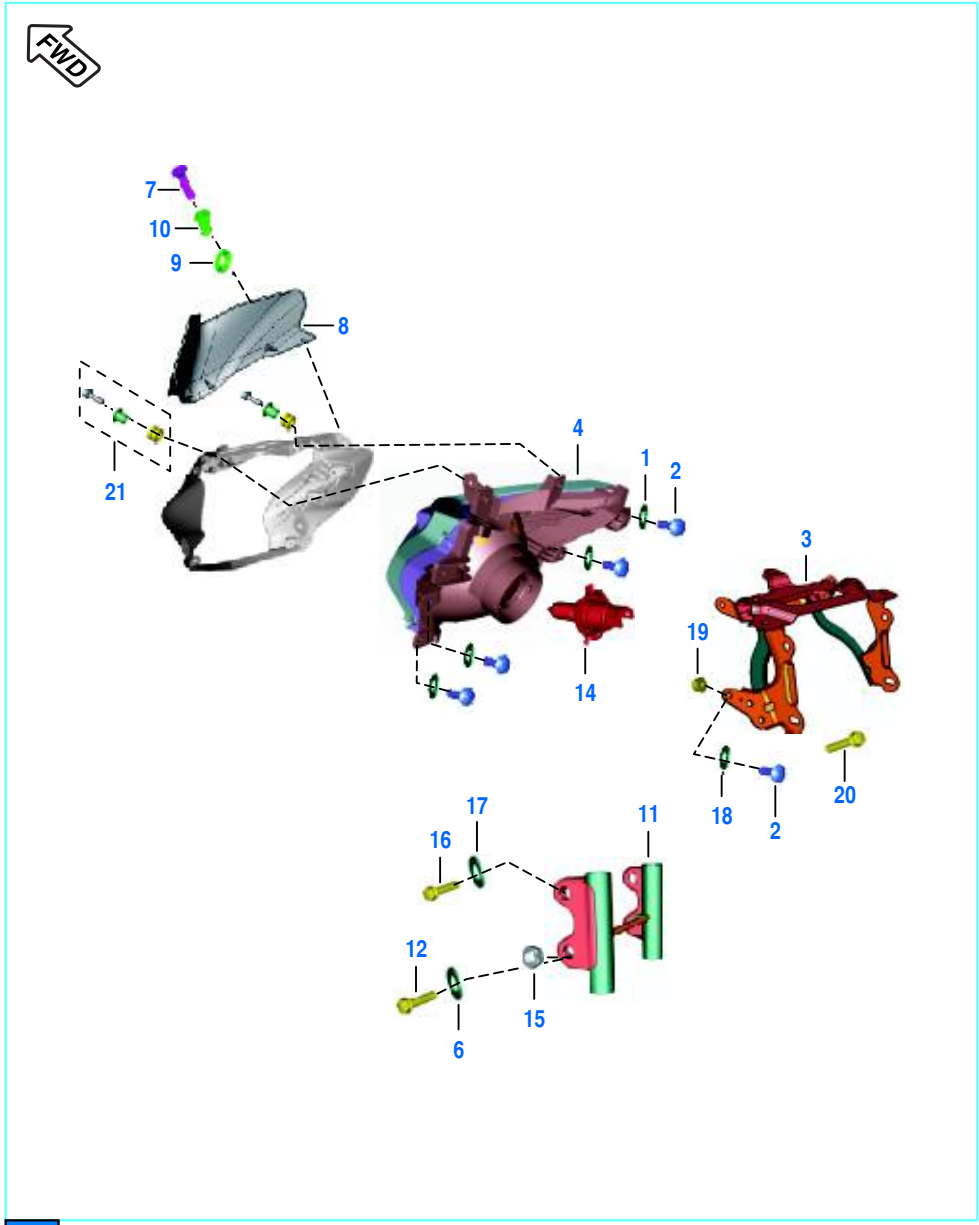

FWD Front Wheel Direction

Plate No.: 50

Head Lamp & Fairing

No.	Part No.	Description	Qty.			Remarks
			125 ST	125 T	100 T	
1	39 0219 11	Washer - Plain	5	5	5	
2	39 1907 01	Screw - Truss Cross : M5	8	8	8	
3	PA 1812 27	Fairing Mounting Structure	1	1	1	
4	JZ 4010 43	Assembly Headlamp	1	1	1	W/O Bulb
5	39 1778 02	Screw - Tapping : 4 X 14	1	1	1	
6	39 0375 11	Washer - Plain	1	1	1	
7	39 1907 01	Screw - Truss Cross : M5	2	2	2	
8	JZ 1812 37	Windshield	1	1	1	
9	39 2141 24	Washer	2	2	2	(Non Metallic Round Washer)
10	PA 1812 46	Nut Well - M5X0.8	2	2	2	
11	JZ 1510 47	Assembly Lamp Shade	1	--	--	
	PA 1510 05	Assembly Lamp Shade	--	1	1	
12	39 1683 04	Bolt - Flange	2	2	2	
13	JZ 4010 29	Wiring Harness Head Lamp	1	1	1	N.I.
14	CL 2010 23	Bulb (12V HS1 35/35W)	1	1	1	
15	39 0956 15	Nut M8	2	2	2	
16	39 1714 04	Hexagon Bolt with Flange	2	2	2	
17	39 1792 11	Washer	2	2	2	
18	39 1765 11	Washer	9	4	9	
19	DJ 1612 29	Nut	6	2	6	
20	39 1943 04	Bolt	4	2	4	
21	36 JZ01 01	Kit Fairing Mtg	2	2	2	
22	JZ 1810 04	Foam Strip	4	4	4	
23	PA 1822 00	Damper Rubber RH	--	1	1	Grommet-PA181292
24	PA 1822 01	Damper Rubber LH	--	1	1	Collar-PA181293

Brand ID: 001MC649 (DISCOVER 125 ST)
Brand ID: 001MC661 (DISCOVER 125 T)
Brand ID: 001MC639 (DISCOVER 100 T)

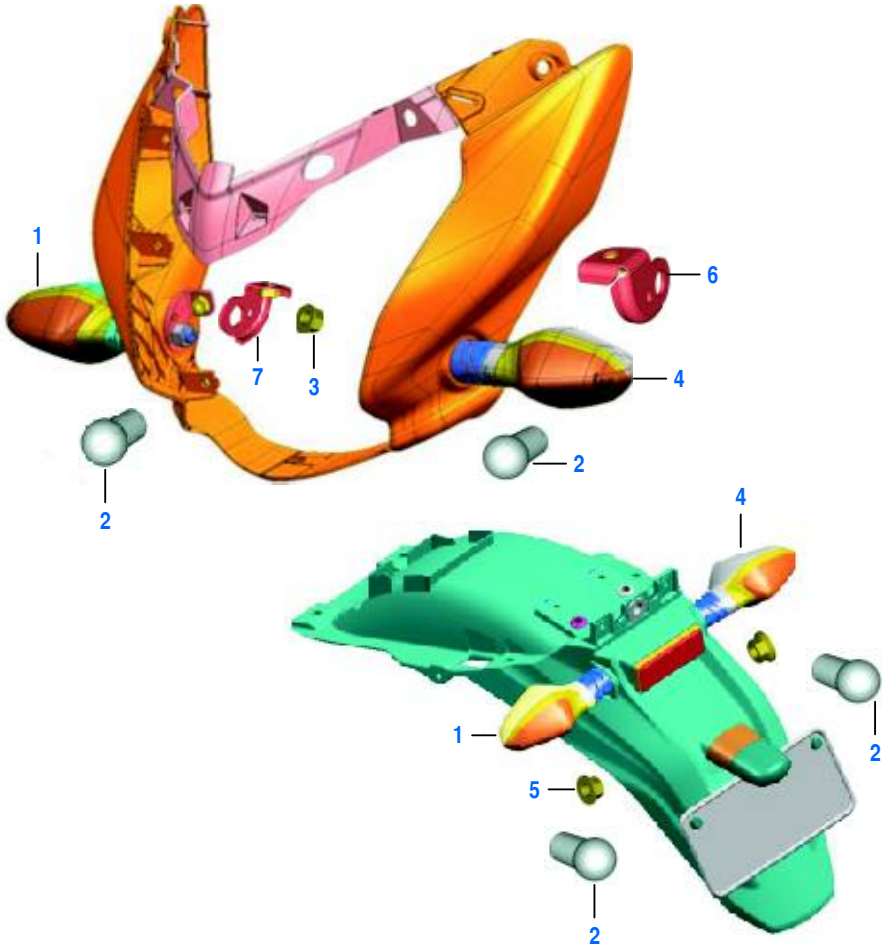

Front Wheel Direction

Plate No.: 51

Indicator Light Assembly

No.	Part No.	Description	Qty.			Remarks
			125 ST	125 T	100 T	
1	JZ 4010 38	Indicator Fr RH / Rr LH	2	2	2	
2	GH 2010 12	Lamp 12V-10W	4	4	4	
3	LC A000 05	Nut Hex M10X1.25	2	2	2	
4	JZ 4010 39	Indicator Fr LH / Rr RH	2	2	2	
5	39 1225 15	Nut - Hexagon With Flange	2	2	2	M10
6	JZ 1812 60	Bracket Blinker Mtg LH	1	1	1	
7	JZ 1812 61	Bracket Blinker Mtg RH	1	1	1	

Brand ID: 001MC649 (DISCOVER 125 ST)
Brand ID: 001MC661 (DISCOVER 125 T)
Brand ID: 001MC639 (DISCOVER 100 T)

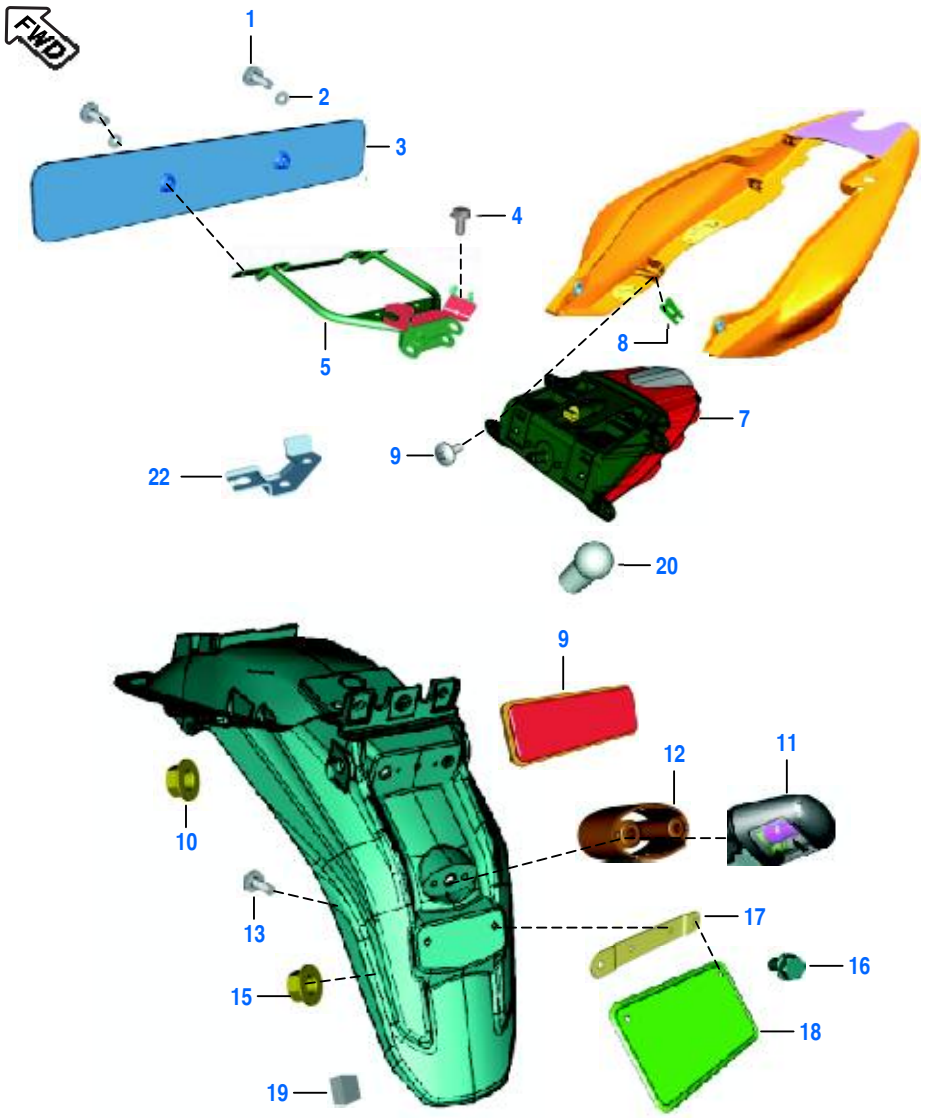

FWD Front Wheel Direction

Plate No.: 52

Tail Lamp Assly / Front Number Plate

No.	Part No.	Description	Qty.			Remarks
			125 ST	125 T	100 T	
1	39 0044 01	Screw Round Head	2	2	2	
2	39 1501 11	Washer Plain	2	2	2	
3	JU 2328 00	Front Number Plate	1	1	1	
4	LA C000 13	Bolt Socket	2	2	2	
5	JZ 1812 99	Bracket Number Plate Mtg	1	--	--	
	PA 1813 00	Bracket Number Plate Mtg	--	1	1	
6	39 1907 01	Screw M5	4	4	4	
7	PA 4010 09	Tail Lamp Without Bulb	1	1	1	
8	DJ 1612 29	Clip Nut M5	4	4	4	
9	DD 2010 02	Reflector - Reflex	1	1	1	
10	39 2484 15	Nut - Flange : M5	1	1	1	
11	JD 4010 07	Rear Number Plate Lamp	1	1	1	
12	JZ 4010 42	Spacer Illumination Lamp	1	1	1	
13	KB UA05 45	Screw Trus	2	2	2	
14	DL 1610 15	Grommet	1	1	1	For Illumination Lamp
15	39 2124 15	Nut - Hexagon With Flange	2	2	2	M6 X 1
16	39 2476 04	Bolt - Hexagon Head	2	2	2	With Flange : M6
17	DJ 1610 72	Bracket-Rear Number Plate	1	1	1	
18	DP 1611 45	Plate -No.:Rr	1	1	1	
19	JZ 2328 05	Foam Rear Number Plate	1	1	1	
20	20 2010 29	Bulb 21/5W	1	1	1	
21	JZ 4010 46	Holder Tail Lamp with Wiring	1	1	1	N.I.
22	PA 1318 32	Clamp Speedo Cable	--	1	1	

Brand ID: 001MC649 (DISCOVER 125 ST)
Brand ID: 001MC661 (DISCOVER 125 T)
Brand ID: 001MC639 (DISCOVER 100 T)

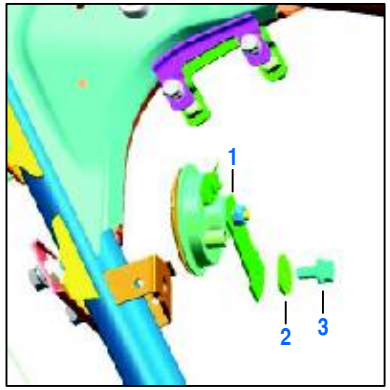

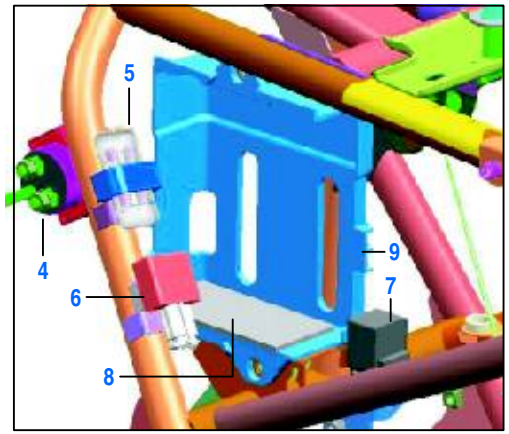

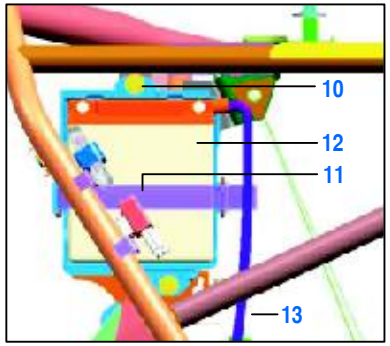

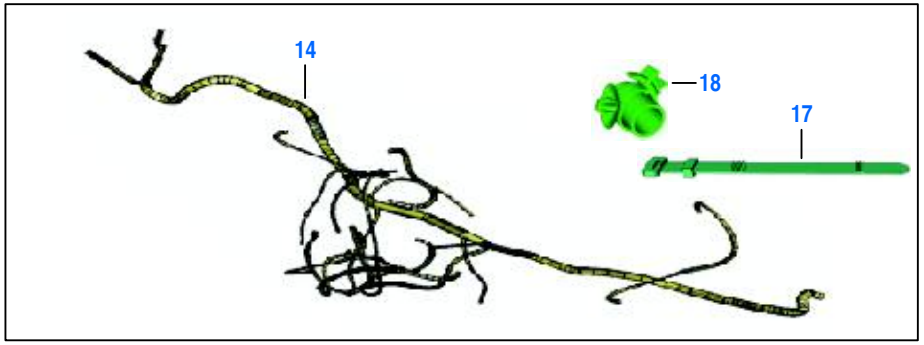

FWD Front Wheel Direction

Plate No.: 53

Electrical Equipments

No.	Part No.	Description	Qty.			Remarks
			125 ST	125 T	100 T	
1	JL 4016 00	Horn	1	1	1	
2	39 1507 11	Washer - Plain	1	1	1	
3	39 1970 15	Hex Nut	1	1	1	
4	JN 3516 04	Starter Relay-with Grommet	1	1	1	
5	DJ 2012 19	Fuse Box Assly.	1	1	1	
6	DS 2010 25	Flasher - D. C.	1	1	1	
7	JZ 4010 13	Headlamp Control Unit	1	1	1	
8	JZ 4018 09	Pad (Foam) Battery	1	1	1	
9	JZ 4018 03	Case Battery	1	--	--	
10	DS 1612 24	Step - Bolt	2	2	2	
11	JZ 4018 04	Band Battery	1	--	--	
	PA 4018 04	Band Battery	--	1	1	
12	DS 2010 81	Battery MF 5Ah	1	1	1	Not Serviceable
13	JD 4018 03	Adapter With Vent Tube	1	1	1	
14	PA 4022 16	Harness Wiring	1	--	--	
	JZ 4022 14	Harness Wiring	--	1	1	
15	JV 4022 05	Cable Assy Battery-Earth	1	1	1	N.I.
16	JZ 4022 17	Cable Assy St Relay-Motor	1	--	--	N.I.
	PA 4022 24	Cable Assy St Relay-Motor	--	1	1	N.I.
17	30 2010 64	Band	1	1	1	
18	60 1114 17	Clip Positive Lock	1	1	1	
19	PA 4018 05	Base Battery	1	1	1	
20	PA 4022 26	Cable Relay to Battery	1	1	1	

Brand ID: 001MC649 (DISCOVER 125 ST)
Brand ID: 001MC661 (DISCOVER 125 T)
Brand ID: 001MC639 (DISCOVER 100 T)

FWD Front Wheel Direction

Plate No.: 54

Tool Kit

No.	Part No.	Description	Qty.			Remarks
			125 ST	125 T	100 T	
1	DJ 2210 19	Tool Kit With Band	1	1	1	Not Serviceable in Spare
2	DK 2210 24	Band Tool Kit	2	2	2	

Brand ID: 001MC649 (DISCOVER 125 ST)
Brand ID: 001MC661 (DISCOVER 125 T)
Brand ID: 001MC639 (DISCOVER 100 T)

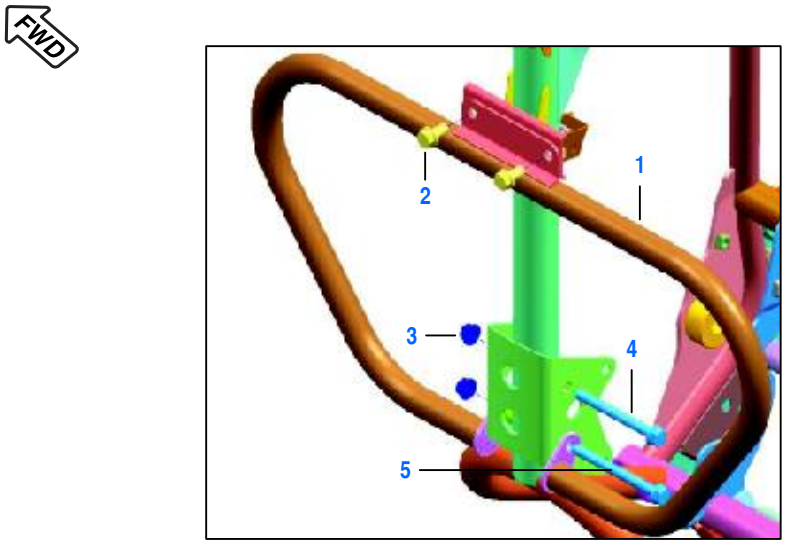

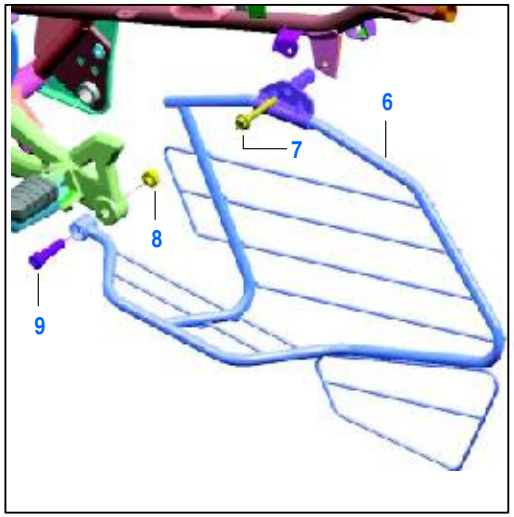

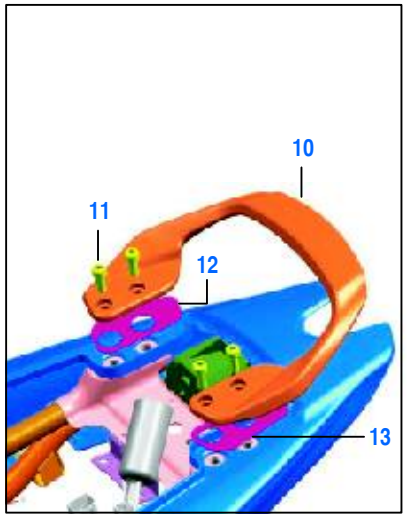

Front Wheel Direction

Plate No.: 55

Accessories / Grab Handle

No.	Part No.	Description	Qty.			Remarks
			125 ST	125 T	100 T	
1	JZ 2312 11	Leg Guard	1	1	1	
2	39 2553 04	Bolt Flange M8	2	2	2	
3	39 1970 15	Flange Hex Nut M8	2	2	2	
4	JA 1134 04	Flanged Bolt M8-75	3	3	3	
5	39 2498 04	Bolt Flange M8	1	1	1	
6	JZ 2312 12	Guard Saree	1	--	--	
	PA 2312 02	Guard Saree	--	1	1	
7	KA DC08 55	Bolt Flange	1	1	1	
8	39 0296 15	Hexagon Nut	1	1	1	
9	KA CB10 40	Bolt Socket	1	1	1	
10	JZ 2314 03	Grab Handle	1	--	1	
	PA 2314 04	Grab Handle	--	1	--	
11	KA CA08 20	Bolt-Socket-KAC ST-A	4	4	4	Dia-08 L-20
12	JZ 2314 11	Foam RH For Grab	1	1	1	
13	JZ 2314 10	Foam LH For Grab	1	1	1	

Brand ID: 001MC649 (DISCOVER 125 ST)
Brand ID: 001MC661 (DISCOVER 125 T)
Brand ID: 001MC639 (DISCOVER 100 T)

Sr No	Kit Part No.	Kit Description	Consisting of Following Parts		
			Part No.	Description	Qty/Kit
1.	36JZ0077	Kit Assly C' Case LH - 125ST	JZ541021	Crankcase LH Exclusive Disco-H	1
			JA541036	Plug (Oil Control)	2
			JA541005	Bush Bendix	1
			JZ541005	Nozzle Oil Jet	1
			39256220	Needle Roller Brg.	1
2.	36JZ0078	Kit Assly C' Case RH- 125ST	JE541018	Crankcase RH (D102A)	1
			31101064	Plug	3
			JA541011	Needle Roller Bearing HK1212	1
			PF541018	Bushing Drum	1
3.	36JZ0074	Kit Block & Piston- 125ST	JE521208	Piston Assembly D102C	1
			JE521012	Cylinder Block D102C	1
4.	36JZ0079	Kit Assly Cyl Head- 125ST	JE511009	Cylinder Head Comp	1
			31101064	Plug	1
			39128321	O Ring	1
			39262921	O-Ring	1
			39166005	Stud M8X1.25X45L	2
5.	36JZ0075	Kit Assly Cl Cover - 125ST	JE541215	Cover Clutch D102A	1
			31101064	Plug	2
6.	36JZ0023	Kit Primary Drive + Driven	JZ531006	Gear Primary Drive	1
			PF551401	Clutch Hsg Assly Comp	1
7.	36JZ0080	Kit Chain Sprocket - 125ST	JZ551004	Sprocket Output 14T Disco-H	1
			JZ141001	Chain 126 Link 428 Series	1
			JZ141005	Sprocket Rear-45 T	1
8.	36JE0001	Kit Valve Repair- 125ST	39201719	Seal - Oil	2
			JD511203	Seat Valve Spring	2
			JD511204	Valve Spring	2
			JD511205	Retainer Valve Spring	2
			DG101029	Collet	4
9.	36JZ0083	Kit Steering Cone- 125ST	JZ151082	Bearing Cone Lower	1
			DH181026	Bearing Race	1

Sr No	Kit Part No.	Kit Description	Consisting of Following Parts		
			Part No.	Description	Qty/Kit
			DH181024	Upper Bearing Race	1
			DH181025	Bearing Cone	1
			36001052	Grease Lethon RR-3 -10Gm	1
			DJ181115	Cage Bearing Steering	2
11.	36JE0002	Kit Piston Ring- 125ST	JE521202	Top Ring Shriram	1
			JE521203	Second Ring Shriram	1
			JE521204	Oil Ring Shriram	1
12.	36JZ0099	Kit Friction Plate- 125ST	JE551406	Plate Friction D102C	5
13.	36JE0018	Kit Jet D125	NA	Jet Needle	1
			NA	Needle Jet	1
			NA	Je Holder	1
			NA	Main Jet	1
			DK121063	Pilot Jet	1
14.	Dk121041	Kit VC Screw D125	NA	Screw Adjuster VC	1
			DH121130	O- Ring Screw VC (Outside - Near The Head Of Vc Screw)	1
			DH121086	Spring Screw VC	1
			DH121087	Plain Washer	1
			DH121088	'O' - Ring Screw VC (Inside - At The Tip Of Air Screw)	1
15.	36JE0017	Kit Pilot Screw D125	NA	Screw Idling Adjustment	1
			DH121163	Plain Washer	1
			DH121077	Spring	1
16.	36JE0016	Kit Piston Valve D125	NA	Vacuum Piston Compl.	1
			DK121055	Diaphragm	1
			DK121054	Spring	1
17.	36JE0022	Kit Gasket/O-Ring-D125	DK121058	O Ring/Gasket Float Chamber	1
			DH121118	O-Ring - Drain Screw	1
			DH121088	O-Ring - Vc Screw	1
			DH121130	O-Ring - Vc Screw	1

Sr No	Kit Part No.	Kit Description	Consisting of Following Parts		
			Part No.	Description	Qty/Kit
18.	36JZ0098	Kit Boss Kick	JZ621202	Boss Kick Lever D102A	1
			JZ621203	Spring Kick Lever	1
			30101236	Ball -Steel	1
			22150241	Washer - plain	1
			30101235	Pin	1
			39085517	Circlip : E - type	1
19.	36JE0019	Kit Float Chamber Body	NA	Float Body	1
			DP121059	O-Ring	1
			JE581218	Drain Screw	1
			DP121067	Screw	2
			DH121118	O Ring Drain Screw	1
20.	36JE0020	Kit Top Cap	NA	Diaphragm Cover	1
			DH121176	Screw	2
21.	36JE0021	Kit Plunger Assly	NA	Screw	1
			DD121058	Spring	1
			NA	Plunger Assly	1
			NA	Guide Holder	1
			NA	O-Ring	1
			NA	Dust Cap	1
22.	36PA0094	Kit Valve Repair-D100 T	39201719	Seal Valve Stem	2
			PA511223	Valve Spring	2
			PA511210	Retainer Valve Spring	2
			DG101029	Cotter Valve	4
23.	36PA0095	Kit Chain Sprocket-D100 T	PA141002	Chain 126 Links 428 Series	1
			PA141008	Sprocket Rear Wheel 43T-68 PCD	1
			JZ551004	Sprocket Output 14T Disco-H	1
24.	36PA0098	Kit Chain Case Kit-D100 T	PA181228	Assembly Chain Case Upper	1
			PA181229	Assembly Chain Case Lower	1

Sr No	Kit Part No.	Kit Description	Consisting of Following Parts		
			Part No.	Description	Qty/Kit
25.	36PA0099	Kit Assly Clutch Cover-D100T	JB541207	Cover Clutch Star Type	1
			31101064	Plug	2
			JB541201	Jet Clutch Cover Disco M	1
			39104119	Seal Oil	1
			30101142	Seal Oil	1
26.	36PA0093	Kit Block-Piston-D100 T	PA521216	Piston Assembly	1
			PA521012	Block Cylinder	1
27.	36JZ0081	Kit Chain Guide-D100 T	JE521011	Guide Camchain (Tight Side)	1
			JE541014	Guide Camchain (Slack Side)	1
28.	36PA0003	Kit Piston Ring-D100 T	JB521207	Ring Piston (Top)	1
			JB521208	Ring Piston (Second)	1
			JB521209	Ring Piston Oil	1
29.	36JZ0028	Kit Assly C'Case LH-D100 T	39256220	Needle Roller Brg.	1
			JB541021	Crankcase LH	1
			JA541036	Plug (Oil Control)	1
			JZ541005	Nozzle Oil Jet	1
			JA541005	Bush Bendix	1
30.	36JZ0008	Kit Starter Clutch Repair	DH101163	Roller - Clutch	5
			DH101164	Spring - Starter Clutch	5
			DJ101109	Bush For Spring Starter Bush	
				Spring Starter	5
			JA621411	Clutch	5
31.	36DK0017	Kit Hardware Rod Brake	30191038	Pin	1
			39021911	Washer - plain	1
			39080808	Pin - Split	1
			30191035	Spring	1
			15191026	Pin	1
			30191036	Nut - Brake Adjuster	1

Sr No	Kit Part No.	Kit Description	Consisting of Following Parts		
			Part No.	Description	Qty/Kit
32.	36PA0104	Kit Carb Jet 100T	PA581209	Jet Needle	1
			PA581210	Needle Jet	1
			PA581211	Holder Needle Jet	1
			PA581212	Jet Main # 95	1
			JB581263	Jet Comp #38	1
			PA581213	Screw Adjuster	1
33.	36PA0105	Kit Carb Air Screw D100T	JB581240	'O' Ring	1
			JB581244	Spring Compress Coil	1
			JB581245	Plain Washer	1
			JB581246	'O' Ring	1
34.	36PA0106	Kit Carb Idling Screw D100T	PA581214	Screw Stop	1
			JB581240	'O' Ring	1
			PA581215	Spring Compress	1
35.	36PA0107	Kit Carb Throttle Valve D100T	PA581216	Valve Throttle	1
			PA581217	Bar Clip	1
			PA581218	Collar Magnet Holder	1
			PA581219	Spring Compress	1
36.	36PA0108	Kit Carb Gasket & 'O' Ring D100T	PA581220	Gasket Float Chamber	1
			JB581239	Top Gasket	1
			JB581240	'O' Ring	3
			JB581269	'O' Ring 24x26 (Eng Side)	1
37.	36PA0096	Kit Assly Cyl Head -D100 4V	PA511045	Cylinder Head Machined	1
			PA511236	Seat Valve Inlet	2
			PA511237	Seat Valve Exhaust	2
			JA511004	Guide Valve	4
			39262921	'O' ring	1
			39128321	'O' Ring	1
38.	PA541011	Assembly Crankcase RH	JA541014	Bolt Shift Change	1
			JA541015	Stud Inhibitor Mounting	1
			59200036	Bearing - Ball	1

Sr No	Kit Part No.	Kit Description	Consisting of Following Parts		
			Part No.	Description	Qty/Kit
			PA541012	Crankcase RH	1
			DH101380	Screw - Pan : Pr-ecoated	1
			JA541011	Needle Roller Bearing	1
			JA541012	Guide Kick	1
			31101064	Plug	1
			PF541018	Bushing Drum 4 Speed	1
			39196404	Bolt - Flanged : Small	2
			JA541010	Stopper Plate Input Bearing	1
39.	36JB0020	Kit Mag Cover Star Type	JZ541210	Cover Magneto (self Start)	1
			JA541005	Bush Bendix	1
40.	36PA0113	Kit Chain Sprocket - 125 T	PA141001	Chain-126 Links 428 H Series	1
			DS151072	Sprocket	1
			JZ551004	Sprocket Output 14T Disco-H	1
41.	36PA0114	Kit Chain Case - 125 T	PA181218	Assembly Chain Case Upper	1
			PA181219	Assembly Chain Case Lower	1
42.	36PA0115	Kit Guide Cam Chain - 125 T	JE541030	Guide Cam Chain Slack Side D102 TX	1
			JE521019	Guide Cam Chain Tight D102C	1
43.	36JE0024	Kit Friction Plate	JE551410	Friction Plate	5

Part Number	Figure No.	Page No.
01 1009 05	12	18
15 1610 69	2	108
20 2010 29	20	114
22 1502 41	14	26
28 1012 14	9	32
30 1010 96	5	32
30 1011 42	18	28
30 1011 95	3	30
30 1012 36	8	58
30 1410 31	4	56
30 1410 31	4	58
30 1410 31	3	98
30 1410 39	20	98
30 1510 05	17	76
30 1510 11	15	74
30 1510 32	3	68
30 1510 33	3	66
30 1510 33	1	68
30 1510 38	16	74
30 1510 38	16	76
30 1510 69	11	68
30 1510 69	14	74
30 1510 69	14	76
30 1510 75	5	74
30 1510 75	5	76
30 1510 96	20	80

Part Number	Figure No.	Page No.
30 1511 18	17	68
30 1511 05	12	68
30 1511 05	13	74
30 1810 25	4	86
30 1810 26	5	86
30 1810 29	13	86
30 1810 45	18	88
30 1910 38	14	56
30 1910 48	24	84
30 2010 64	17	116
31 1011 73	7	12
31 1510 07	13	76
31 1510 21	6	76
31 2010 79	12	80
31 2010 81	8	22
36 0010 52	8	50
36 DF18 01	6	86
36 DJ40 31	14	70
36 DJ40 32	7	72
36 DJ40 33	8	72
36 DK00 17	21	80
36 JB00 20	1	30
36 JE00 01	7	6
36 JE00 02	5	10
36 JE00 16	2	34
36 JE00 17	3	34

Part Number	Figure No.	Page No.
36 JE00 18	4	34
36 JE00 19	5	34
36 JE00 20	6	34
36 JE00 21	7	34
36 JE00 22	8	34
36 JE00 23	4	34
36 JE00 24	6	32
36 JL00 15	16	58
36 JZ00 08	9	42
36 JZ00 23	3	32
36 JZ00 28	1	22
36 JZ00 74	1	10
36 JZ00 75	1	28
36 JZ00 77	1	22
36 JZ00 78	1	20
36 JZ00 79	1	4
36 JZ00 80	2	74
36 JZ00 81	9	8
36 JZ00 82	1	40
36 JZ00 83	4	50
36 JZ00 89	9	92
36 JZ00 90	11	92
36 JZ00 91	9	92
36 JZ00 92	11	92
36 JZ00 93	9	92
36 JZ00 94	11	92

Part Number	Figure No.	Page No.
36 JZ00 95	9	92
36 JZ00 96	11	92
36 JZ00 98	11	26
36 JZ00 99	6	32
36 JZ01 01	21	110
36 JZ01 07	9	86
36 PA00 03	5	10
36 PA00 93	1	10
36 PA00 94	7	6
36 PA00 95	2	76
36 PA00 96	1	4
36 PA00 97	1	40
36 PA00 98	1	108
36 PA00 99	1	28
36 PA01 01	12	92
36 PA01 02	12	92
36 PA01 03	12	92
36 PA01 04	2	36
36 PA01 05	3	36
36 PA01 06	4	36
36 PA01 07	5	36
36 PA01 08	6	36
36 PA01 09	11	96
36 PA01 10	11	96
36 PA01 11	11	96
36 PA01 12	11	96

Part Number	Figure No.	Page No.
36 PA01 13	2	76
36 Pa01 14	1	108
36 PA01 15	9	8
36 PA01 16	1	40
36 PA01 17	9	96
36 PA01 18	9	96
36 PA01 19	9	96
36 PA01 20	9	96
39 0044 01	1	114
39 0198 11	15	56
39 0198 11	10	80
39 0219 11	8	106
39 0219 11	1	110
39 0242 11	6	60
39 0242 11	11	106
39 0291 15	9	102
39 0292 15	17	52
39 0292 15	18	54
39 0292 15	3	80
39 0296 15	8	120
39 0326 15	8	60
39 0326 15	12	106
39 0375 11	6	110
39 0422 15	9	62
39 0454 11	13	52
39 0454 11	11	54

Part Number	Figure No.	Page No.
39 0553 02	12	52
39 0553 02	10	54
39 0594 17	2	8
39 0694 15	19	80
39 0711 11	3	102
39 0738 17	3	26
39 0740 11	12	98
39 0747 01	10	22
39 0761 01	4	98
39 0784 08	6	56
39 0784 08	6	58
39 0789 12	17	80
39 0789 12	20	88
39 0797 08	6	62
39 0808 08	6	18
39 0808 08	16	56
39 0808 08	11	80
39 0817 15	14	18
39 0840 01	15	68
39 0849 14	10	42
39 0900 12	16	68
39 0956 15	15	110
39 0980 04	10	32
39 0987 17	4	14
39 0992 06	7	16
39 0993 11	6	26

Part Number	Figure No.	Page No.
39 0999 06	11	22
39 0999 06	4	24
39 0999 06	6	30
39 1000 06	2	10
39 1001 20	14	32
39 1013 21	19	68
39 1040 11	5	56
39 1040 11	5	58
39 1041 19	10	28
39 1063 01	3	80
39 1181 01	21	88
39 1225 15	5	112
39 1283 21	4	4
39 1309 11	20	44
39 1358 15	7	54
39 1501 11	2	114
39 1507 11	2	116
39 1537 21	5	80
39 1540 11	18	80
39 1552 04	2	102
39 1561 21	19	28
39 1660 05	6	4
39 1671 21	6	28
39 1673 04	19	44
39 1675 04	5	44
39 1680 04	9	106

Part Number	Figure No.	Page No.
39 1683 04	12	110
39 1714 04	3	82
39 1714 04	16	110
39 1715 19	3	22
39 1759 04	12	22
39 1765 11	18	110
39 1778 02	5	110
39 1789 24	8	100
39 1791 04	8	56
39 1792 11	17	110
39 1864 20	2	12
39 1902 04	3	46
39 1907 01	2	110
39 1907 01	7	110
39 1907 01	6	114
39 1912 04	21	84
39 1940 04	6	48
39 1943 04	11	100
39 1943 04	20	110
39 1949 04	9	38
39 1949 04	18	44
39 1951 04	1	100
39 1964 04	9	20
39 1970 15	2	48
39 1970 15	3	116
39 1970 15	3	120

Part Number	Figure No.	Page No.
39 1981 04	22	14
39 2017 19	3	6
39 2124 15	15	114
39 2141 24	9	110
39 2179 24	2	98
39 2190 19	6	22
39 2204 04	10	38
39 2240 20	8	74
39 2240 20	8	76
39 2249 15	18	82
39 2310 04	18	56
39 2408 17	8	26
39 2420 01	7	60
39 2420 01	10	106
39 2424 11	2	100
39 2453 04	2	18
39 2476 04	16	114
39 2484 15	6	98
39 2484 15	10	114
39 2492 11	9	40
39 2498 04	4	48
39 2498 04	5	120
39 2539 21	8	4
39 2553 04	2	120
39 2562 20	4	22
39 2600 11	3A	32

Part Number	Figure No.	Page No.
39 2608 01	3	4
39 2629 21	5	4
39 2659 12	19	56
39 2669 21	14	8
39 2671 04	13	56
39 2686 20	3	74
39 2687 20	4	74
39 2688 20	1	66
39 2688 20	2	68
39 2688 20	3	76
39 2704 11	20	18
39 2723 15	8	48
39 2726 12	2	54
39 2758 21	5	98
52 JA00 27	10	20
52 JZ02 64	1	18
59 0400 06	12	86
59 0400 14	16	44
59 0400 19	2	60
59 0400 31	7	8
59 0400 38	2	2
59 0400 38	11	22
59 0400 38	4	28
59 0400 38	10	30
59 0400 50	6	2
59 1100 08	4	12

Part Number	Figure No.	Page No.
59 1200 03	3	12
59 1500 03	12	66
59 1500 03	14	68
59 1500 03	23	76
59 1500 14	2	12
59 2000 36	4	20
59 2000 36	2	22
59 2100 23	16	22
59 2100 24	19	14
60 1114 17	18	116
AA 1210 71	12	4
CF 1110 19	17	44
CL 2010 23	14	110
CS 1011 28	11	8
DD 1010 48	11	44
DD 1010 97	12	26
DD 1110 11	12	44
DD 1110 12	10	44
DD 1110 18	17	44
DD 1211 81	8	28
DD 1410 22	13	98
DD 1810 90	15	86
DD 1810 91	17	88
DD 2010 02	9	114
DD 2011 70	28	84
DE 1510 06	2	66

Part Number	Figure No.	Page No.
DE 1510 08	5	66
DE 1510 12	4	66
DE 1510 46	2	72
DE 1510 47	3	72
DE 1510 48	5	72
DE 1910 10	10	70
DE 1910 11	11	70
DE 1910 28	7	70
DE 1910 29	6	70
DE 1910 31	2	70
DE 1910 32	3	70
DE 1910 33	15	70
DE 1910 35	4	70
DE 2010 16	9	70
DF 1611 02	1	62
DF 1810 88	14	86
DG 1010 29	4	6
DG 1013 39	21	18
DG 1014 18	12	28
DG 1210 25	6	38
DG 1611 21	7	100
DG 1710 17	9	52
DG 1710 18	5	52
DG 1710 19	6	52
DH 1010 48	6	8
DH 1012 64	9	22

Part Number	Figure No.	Page No.
DH 1013 01	6	40
DH 1013 80	6	20
DH 1013 80	7	44
DH 1013 82	7	42
DH 1013 92	10	8
DH 1013 95	5	40
DH 1015 09	13	18
DH 1017 81	8	42
DH 1110 13	15	44
DH 1110 15	13	44
DH 1210 38	11	38
DH 1210 41	15	34
DH 1210 59	11	34
DH 1210 63	14	34
DH 1210 64	12	34
DH 1210 93	13	34
DH 1211 76	18	34
DH 1510 29	16	80
DH 1611 57	14	58
DH 1611 58	12	60
DH 1611 94	17	56
DH 1612 33	2	46
DH 1710 19	23	74
DJ 1410 08	4	100
DJ 1510 36	15	54
DJ 1510 37	16	54

Part Number	Figure No.	Page No.
DJ 1510 42	15	80
DJ 1510 47	17	54
DJ 1610 69	4	60
DJ 1610 72	17	114
DJ 1612 28	11	30
DJ 1612 29	9	100
DJ 1612 29	19	110
DJ 1612 29	8	114
DJ 1612 78	14	58
DJ 1710 33	23	76
DJ 1810 42	17	88
DJ 1810 43	15	86
DJ 1810 85	18	88
DJ 1811 15	5	50
DJ 1910 06	1	70
DJ 1910 30	5	70
DJ 1910 55	7	82
DJ 1910 58	8	70
DJ 2011 73	10	60
DJ 2012 19	5	116
DJ 2210 19	1	118
DK 1210 41	9	34
DK 1410 41	18	98
DK 1510 94	6	74
DK 1510 94	6	76
DK 1710 06	7	52

Part Number	Figure No.	Page No.
DK 2010 49	7	50
DK 2210 24	2	118
DL 1610 15	14	114
DM 1510 25	2	64
DM 1510 28	5	64
DP 1011 65	6	10
DP 1012 69	9	28
DP 1210 18	20	34
DP 1210 59	19	34
DP 1210 67	17	34
DP 1611 45	18	114
DP 1710 06	8	54
DS 1011 17	4	26
DS 1011 54	8	12
DS 1012 15	11	28
DS 1012 76	5	8
DS 1099 05	8	8
DS 1211 26	7	38
DS 1410 12	17	98
DS 1410 12	5	100
DS 1510 10	17	82
DS 1510 25	15	80
DS 1510 48	2	64
DS 1510 49	3	64
DS 1510 52	5	64
DS 1510 53	6	64

Part Number	Figure No.	Page No.
DS 1510 68	7	76
DS 1510 73	10	74
DS 1510 87	8	68
DS 1510 89	10	68
DS 1510 90	17	74
DS 1510 91	9	68
DS 1510 92	6	68
DS 1510 94	7	68
DS 1510 94	20	74
DS 1510 94	20	76
DS 1510 95	5	68
DS 1611 25	3	60
DS 1612 24	15	60
DS 1612 24	2	106
DS 1612 24	10	116
DS 1810 07	14	82
DS 1810 12	12	86
DS 1810 15	22	88
DS 1810 16	23	88
DS 1910 52	8	82
DS 1910 54	4	104
DS 2010 25	6	116
DS 2010 81	12	116
DS 2110 07	4	46
DU 1012 13	21	14
DU 1611 02	6	100

Part Number	Figure No.	Page No.
DX 1510 14	16	54
DX 1510 15	27	78
DX 1510 22	25	74
DX 1610 52	4	108
DX 1910 01	20	84
DX 1910 09	25	84
DZ 1410 75	21	98
FD 1010 78	2	24
GF 1611 43	3	58
GH 2010 12	2	112
JA 1134 03	7	48
JA 1134 04	3	48
JA 1134 04	4	120
JA 1316 06	18	68
JA 1510 13	10	86
JA 3516 00	4	42
JA 5110 08	5	2
JA 5110 28	6	4
JA 5112 11	6	6
JA 5112 16	4	8
JA 5210 17	12	8
JA 5210 18	3	8
JA 5210 19	13	8
JA 5210 19	5	28
JA 5310 07	15	32
JA 5310 12	9	12

Part Number	Figure No.	Page No.
JA 5310 15	6	12
JA 5410 05	5	22
JA 5410 05	7	30
JA 5410 10	5	20
JA 5410 11	3	20
JA 5410 12	8	20
JA 5410 14	7	20
JA 5410 16	3	24
JA 5410 21	15	22
JA 5410 27	7	22
JA 5410 28	6	44
JA 5410 34	10	22
JA 5410 44	4	30
JA 5412 05	8	30
JA 5412 11	14	28
JA 5412 12	15	28
JA 5412 25	11	20
JA 5412 25	13	28
JA 5412 33	2	30
JA 5412 35	11	20
JA 5412 36	16	28
JA 5412 37	17	28
JA 5510 02	3	14
JA 5510 04	8	14
JA 5510 08	17	14
JA 5510 09	18	14

Part Number	Figure No.	Page No.
JA 5514 06	2	32
JA 5514 20	12	32
JA 5612 09	19	18
JA 5814 06	10	4
JA 5910 40	2	40
JA 6210 02	5	26
JA 6210 06	2	26
JA 6212 06	13	26
JA 6214 02	1	42
JA 6214 06	2	42
JA 6214 10	3	42
JA 6214 14	6	42
JB 1220 09	1	54
JB 1220 10	4	54
JB 1220 11	3	54
JB 1220 16	6	54
JB 1310 17	10	66
JB 1310 17	4	68
JB 1310 18	11	66
JB 1310 18	13	68
JB 1310 22	13A	68
JB 1312 24	19	74
JB 1312 24	19	76
JB 1312 25	21	76
JB 1812 39	3	108
JB 2312 08	15	60

Part Number	Figure No.	Page No.
JB 3510 14	1	44
JB 3510 22	2	44
JB 4014 00	5	82
JB 4022 02	7	10
JB 5110 18	2	4
JB 5110 19	7	4
JB 5310 21	10	12
JB 5514 08	4	32
JB 5514 11	7	32
JB 5514 12	8	32
JB 5710 05	1	24
JB 5710 06	5	24
JB 5812 02	17	36
JB 5812 04	18	36
JB 5812 29	7	36
JB 5812 30	8	36
JB 5812 32	10	36
JB 5812 37	12	36
JB 5812 47	15	36
JB 5812 48	16	36
JB 5812 55	14	36
JB 5812 56	9	36
JB 5812 58	13	36
JB 5812 60	11	36
JC 1410 15	4	102
JC 1410 16	5	102

Part Number	Figure No.	Page No.
JD 1110 52	9	98
JD 1110 52	3	100
JD 1130 19	2	58
JD 1312 10	24	74
JD 1312 12	26	74
JD 1410 03	1	74
JD 1410 03	1	76
JD 1610 02	6	80
JD 1610 06	7	80
JD 3512 06	14	44
JD 4010 07	11	114
JD 4018 03	13	116
JD 5110 04	2	4
JD 5110 08	7	4
JD 5110 10	3	2
JD 5112 09	6	6
JD 5210 02	3	10
JD 5310 04	5	12
JD 5410 00	7	22
JD 5514 00	11	32
JD 5610 02	5	16
JD 5610 04	3	16
JD 5610 06	2	16
JD 5610 11	6	16
JD 5612 03	17	18
JD 5612 04	18	18

Part Number	Figure No.	Page No.
JD 5614 16	7	18
JE 3510 02	1	44
JE 3512 06	3	44
JE 3512 07	3	44
JE 5010 06	1	20
JE 5010 17	1	20
JE 5112 00	1	6
JE 5112 01	2	6
JE 5112 04	5	6
JE 5112 06	1	8
JE 5112 30	8	8
JE 5210 16	12	8
JE 5310 01	2	12
JE 5310 08	1	12
JE 5410 08	9	26
JE 5412 30	5	30
JE 5412 31	6	28
JE 5412 33	1	30
JE 5412 47	9	30
JE 5512 09	5	14
JE 551210	13	14
JE 5514 09	13	32
JE 5610 03	1	16
JE 5812 13	10	34
JE 5812 18	16	34
JE 5812 23	14	34

Part Number	Figure No.	Page No.
JE 5812 31	1	34
JE 5812 37	21	34
JE 5812 38	1	34
JE 5910 02	3	40
JE 6210 01	1	26
JG 1812 38	7	102
JG 5710 24	13	22
JG 6012 10	8	38
JK 1210 07	7	86
JK 1210 09	8	86
JL 1130 28	7	56
JL 1130 28	9	58
JL 1318 07	4	72
JL 1710 60	15	98
JL 1718 03	14	98
JL 1812 19	10	100
JL 1812 25	14	52
JL 4016 00	1	116
JL 5614 09	11	18
JL 5614 10	10	18
JM 1910 14	13	80
JN 1310 03	8	66
JN 1312 03	7	74
JN 1812 11	14	66
JN 3516 04	4	116
JP 3510 07	2	44

Part Number	Figure No.	Page No.
JU 2328 00	3	114
JV 4022 05	15	116
JW 1318 01	1	72
JW 1318 05	12	70
JW 1318 07	6	72
JW 1510 23	9	86
JW 1610 17	6	100
JW 1812 41	13	66
JW 3514 00	4	10
JW 5410 00	3	28
JW 5410 05	2	28
JW 5612 06	15	18
JW 5612 08	16	18
JW 5910 30	7	40
JZ 1110 38	1	50
JZ 1130 20	20	56
JZ 1130 21	9	56
JZ 1130 23	10	58
JZ 1130 26	12	58
JZ 1130 27	10	56
JZ 1130 28	1	56
JZ 1130 31	1	58
JZ 1130 32	11	58
JZ 1130 35	11	56
JZ 1130 35	15	58
JZ 1130 36	2	56

Part Number	Figure No.	Page No.
JZ 1130 39	3	56
JZ 1130 42	13	58
JZ 1132 03	2	62
JZ 1132 04	7	62
JZ 1132 06	3	62
JZ 1132 07	4	62
JZ 1132 09	5	62
JZ 1132 10	8	62
JZ 1132 11	8	62
JZ 1132 12	5	62
JZ 1132 14	4	62
JZ 1134 10	5	48
JZ 1134 11	9	48
JZ 1134 26	1	48
JZ 1138 05	2	50
JZ 1138 06	10	52
JZ 1210 15	19	88
JZ 1210 27	1	86
JZ 1210 30	2	86
JZ 1210 31	3	86
JZ 1210 40	10	86
JZ 1220 01	3	52
JZ 1220 03	1	52
JZ 1220 05	11	52
JZ 1220 08	15	52
JZ 1220 10	4	52

Part Number	Figure No.	Page No.
JZ 1220 11	8	52
JZ 1220 12	16	52
JZ 1310 26	1	64
JZ 1310 28	1	64
JZ 1312 17	21	74
JZ 1312 24	4	64
JZ 1316 01	9	66
JZ 1318 03	18	74
JZ 1318 10	8	80
JZ 1318 11	26	78
JZ 1318 13	9	74
JZ 1318 18	6	66
JZ 1318 75	9	80
JZ 1318 80	24	88
JZ 1510 45	15	82
JZ 1510 47	16	86
JZ 1510 47	11	110
JZ 1510 64	9	82
JZ 1510 65	19	82
JZ 1510 69	10	82
JZ 1510 70	2	82
JZ 1510 78	15	82
JZ 1510 79	16	82
JZ 1510 80	25	88
JZ 1510 83	6	50
JZ 1510 84	3	50

Part Number	Figure No.	Page No.
JZ 1510 91	25	88
JZ 1610 09	1	80
JZ 1610 11	4	80
JZ 1610 19	2	80
JZ 1610 24	12	56
JZ 1612 07	2	104
JZ 1612 08	3	104
JZ 1612 10	1	104
JZ 1612 17	7	46
JZ 1710 04	1	98
JZ 1710 17	8	98
JZ 1718 07	10	98
JZ 1718 17	16	98
JZ 1718 18	19	98
JZ 1718 29	11	98
JZ 1810 04	22	110
JZ 1810 07	4	82
JZ 1810 09	5	106
JZ 1810 12	13	82
JZ 1810 13	12	82
JZ 1812 14	1	106
JZ 1812 37	8	110
JZ 1812 60	6	112
JZ 1812 61	7	112
JZ 1812 69	14	100
JZ 1812 70	13	100

Part Number	Figure No.	Page No.
JZ 1812 71	16	100
JZ 1812 99	5	114
JZ 1814 15	1	60
JZ 1814 16	5	60
JZ 1814 19	9	60
JZ 1814 20	3	106
JZ 1814 21	4	106
JZ 1910 00	1	46
JZ 1910 10	5	46
JZ 1910 11	6	46
JZ 2312 11	1	120
JZ 2312 12	6	120
JZ 2314 03	10	120
JZ 2314 10	13	120
JZ 2314 11	12	120
JZ 2316 00	22	84
JZ 2316 01	23	84
JZ 2326 00	27	84
JZ 2328 05	19	114
JZ 2331 77	8	92
JZ 2331 77	8	94
JZ 2331 78	7	90
JZ 3512 11	8	44
JZ 3512 13	9	44
JZ 4010 13	7	116
JZ 4010 29	13	110

Part Number	Figure No.	Page No.
JZ 4010 38	1	112
JZ 4010 39	4	112
JZ 4010 42	12	114
JZ 4010 43	4	110
JZ 4010 46	21	114
JZ 4014 00	26	84
JZ 4018 03	9	116
JZ 4018 04	11	116
JZ 4018 09	8	116
JZ 4020 00	4	44
JZ 4022 14	14	116
JZ 4022 17	16	116
JZ 4026 00	7	98
JZ 5110 21	1	2
JZ 5412 14	7	28
JZ 5412 26	9	30
JZ 5510 04	20	14
JZ 5510 08	9	14
JZ 5510 10	1	14
JZ 5512 00	7	14
JZ 5512 02	2	14
JZ 5512 04	16	14
JZ 5512 05	15	14
JZ 5512 06	10	14
JZ 5512 10	11	14
JZ 5512 11	12	14

Part Number	Figure No.	Page No.
JZ 5512 13	6	14
JZ 551208	14	14
JZ 5514 13	1	32
JZ 5514 15	9	32
JZ 5610 02	4	16
JZ 5612 01	3	18
JZ 5614 02	9	18
JZ 5614 04	5	18
JZ 5614 05	8	18
JZ 5614 07	4	18
JZ 5710 00	1	24
JZ 5710 01	5	24
JZ 5810 20	1	38
JZ 5810 25	5	38
JZ 5810 26	4	38
JZ 5810 32	3	38
JZ 5810 40	1	38
JZ 5812 29	11	4
JZ 5812 38	11	4
JZ 5814 05	9	4
JZ 5910 95	4	40
JZ 6210 00	7	26
JZ 6212 00	10	26
JZ 7205 1R	5	90
JZ 7206 1R	6	90
JZ 7305 3B	4	90

Part Number	Figure No.	Page No.
JZ 7305 3C	4	90
JZ 7305 3F	4	90
JZ 7305 5R	4	90
JZ 7306 3F	3	90
JZ 7306 3F	3	94
JZ 7306 5J	3	90
JZ 7306 5J	3	94
JZ 7306 5R	3	90
JZ 7306 5R	3	94
JZ 7403 3B	2	90
JZ 7403 3C	2	90
JZ 7403 3F	2	90
JZ 7403 5R	2	90
JZ 7404 3B	2	94
JZ 7404 3C	2	94
JZ 7404 3F	2	94
JZ 7404 5R	2	94
KA CA08 20	11	120
KA Cb10 40	9	120
KA DA05 10	8	40
KA DA06 18	2	38
KA DC08 55	7	120
KB UA05 45	13	114
KP BB62 01	4	76
LA C000 02	7	66
LA C000 05	10	58

Part Number	Figure No.	Page No.
LA C000 13	4	114
LA C000 19	2	52
LA C000 31	11	82
LA C000 52	5	44
LA D000 11	13	4
LA D000 11	5	42
LA D000 37	13	70
LA D000 48	10	48
LA D000 82	6	106
LA E000 01	7	106
LA E000 22	11	60
LB U000 04	15	66
LB U000 05	16	66
LB U000 07	15	100
LC A000 01	28	78
LC A000 05	3	112
LC B000 05	12	74
LC L000 03	12	76
LD A000 18	12	100
LD B000 01	22	74
LD B000 07	8	102
LD B000 28	22	76
LD B000 29	27	78
LD B000 30	22	76
LJ A000 04	14	22
LJ A000 11	14	4

Part Number	Figure No.	Page No.
PA 1110 29	1	50
PA 1110 30	9	54
PA 1130 30	20	56
PA 1130 42	7	58
PA 1130 43	7A	58
PA 1130 48	10	58
PA 1130 49	12	58
PA 1130 51	10	56
PA 1130 53	1	56
PA 1130 55	1	58
PA 1130 57	11	58
PA 1132 04	3	62
PA 1132 06	2	62
PA 1134 00	9	48
PA 1134 02	9	48
PA 1210 12	1	86
PA 1210 15	2	86
PA 1210 16	3	86
PA 1210 17	11	86
PA 1220 09	5	54
PA 1220 10	14	54
PA 1220 13	14	54
PA 1220 14	12	54
PA 1220 15	13	54
PA 1312 08	7	76
PA 1312 15	4	64

Part Number	Figure No.	Page No.
PA 1312 16	24	78
PA 1312 17	25	78
PA 1312 21	24	78
PA 1312 23	11	76
PA 1312 24	11	76
PA 1312 61	10	76
PA 1312 63	6	76
PA 1318 06	26	78
PA 1318 09	18	76
PA 1318 28	8	80
PA 1318 31	9	76
PA 1318 32	22	114
PA 1510 05	16	86
PA 1510 05	11	110
PA 1610 01	1	80
PA 1612 00	2	104
PA 1612 04	3	104
PA 1612 05	7	46
PA 1810 00	12	82
PA 1810 01	4	82
PA 1810 02	13	82
PA 1812 26	1	102
PA 1812 27	3	110
PA 1812 32	17	100
PA 1812 33	18	100
PA 1812 34	19	100

Part Number	Figure No.	Page No.
PA 1812 35	20	100
PA 1812 46	10	110
PA 1813 00	5	114
PA 1814 00	9	60
PA 1814 03	14	60
PA 1814 05	1	60
PA 1822 00	23	110
PA 1822 01	24	110
PA 1910 00	1	46
PA 2312 02	6	120
PA 2314 04	10	120
PA 2330 94	10	92
PA 2331 01	10	92
PA 2331 09	10	92
PA 2331 17	10	92
PA 2331 83	10	96
PA 2331 93	10	96
PA 2332 03	10	96
PA 2332 13	10	96
PA 2332 26	7	94
PA 3510 01	1	44
PA 3510 03	2	44
PA 3512 06	3	44
PA 4010 09	7	114
PA 4014 00	6	82
PA 4014 01	9	82

Part Number	Figure No.	Page No.
PA 4014 05	1	82
PA 4018 04	11	116
PA 4018 05	19	116
PA 4022 16	14	116
PA 4022 24	16	116
PA 4022 26	20	116
PA 4024 22	6	102
PA 4024 24	17	102
PA 4024 25	16	102
PA 4024 26	15	102
PA 4024 27	13	102
PA 4024 28	12	102
PA 4024 29	14	102
PA 4024 31	11	102
PA 4024 32	10	102
PA 5010 07	1	20
PA 5110 39	4	2
PA 5110 54	10	6
PA 5110 55	11	6
PA 5112 15	1	8
PA 5112 28	1	6
PA 5112 29	2	6
PA 5112 32	8	6
PA 5112 34	9	6
PA 5212 14	6	10
PA 5310 21	1	12

Part Number	Figure No.	Page No.
PA 5410 11	1	20
PA 5412 09	9	30
PA 5412 10	11	30
PA 5514 04	1	32
PA 5514 05	9	28
PA 5610 02	1	16
PA 5614 02	9	18
PA 5810 02	1	38
PA 5810 33	12	38
PA 5812 05	11	4
PA 5812 08	1	36
PA 5814 03	9	4
PA 7102 3B	1	90
PA 7102 3C	1	90
PA 7102 3F	1	90
PA 7102 5R	1	90
PA 7103 3B	1	94
PA 7103 3C	1	94
PA 7103 3F	1	94
PA 7103 5R	1	94
PA 7202 1E	5	94
PA 7203 1E	6	94
PA 7502 3B	4	90
PA 7502 3C	4	90
PA 7502 3F	4	90
PA 7502 5R	4	90

Part Number	Figure No.	Page No.
PA 7503 3B	4	94
PA 7503 3C	4	94
PA 7503 3F	4	94
PA 7503 5R	4	94
PF 1210 28	14	86
PF 1312 20	11	74
PF 5410 18	2	20

Part Number	Figure No.	Page No.

Part Number	Figure No.	Page No.